ETS SYSTEM

Easy Systems
Noordervaart 33 | 2200 Herentals | Belgium
T: +32 (0)14/72.93.84 | F: +32 (0)14/72.93.85
info@easy-systems.be | **www.easy-systems.be**

easy ...SYSTEMS

CONFIGURATION OF YOUR CONVEYOR SYSTEM ONLINE:

Go to the website **www.easy-conveyors.com**

Go to the menu bar and select CONFIGURATOR.
Configurator program will open.
Choose your language with the use of country flags.

STEP 1 Go to Product & CAD and choose your required type of conveyor system.
STEP 2 Choose your specific type of conveyor.
STEP 3 Add requested parameters.
STEP 4 Add requested parameters.
STEP 5 Add requested parameters.
STEP 6 Select bottom right, CAD file or Data sheet. Your CAD drawing or Pdf datasheet will be created in left side frame ready for downloading.
STEP 7 Download or save your designed conveyor system as 3D drawing.

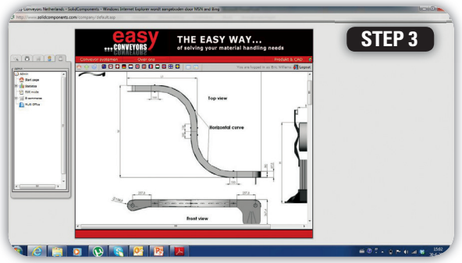

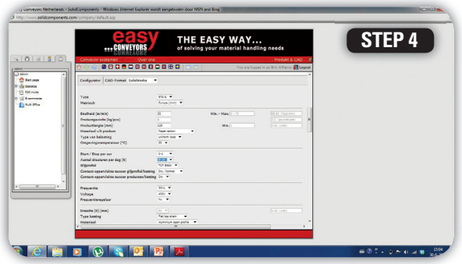

ETS SYSTEM

TABLE TOP CONVEYORS

Stainless steel & aluminium

easy ...SYSTEMS

TABLE TOP CONVEYORS

Easy Conveyors is a manufacturer of modular conveyor systems. Our Product range consists of components for belt-, mat top-, table top- and roller conveyors.

ETS SYSTEM

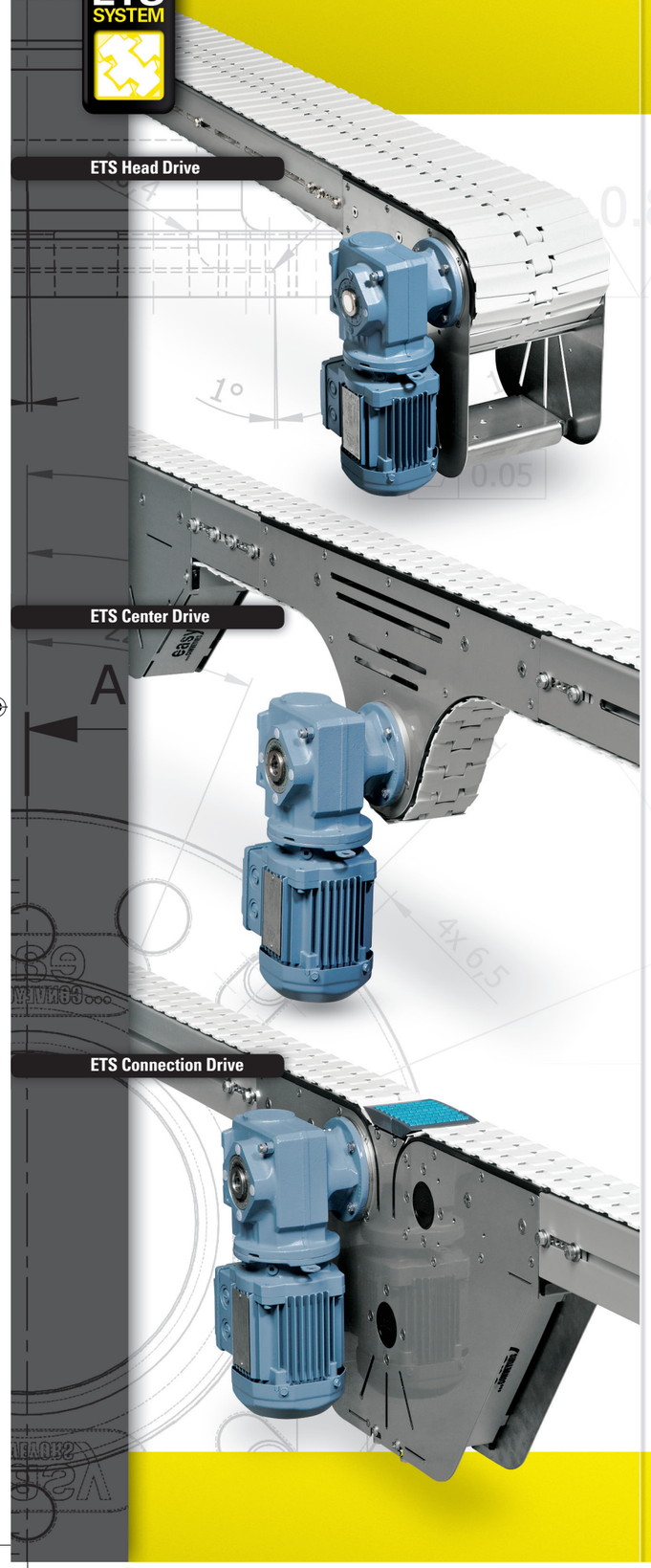

The Easy Conveyors concept is based on long experience in R&D and continuous quality improvement of product conveyor systems. On this base we continuously developing competitive products for our customers worldwide.

Our product range is based on the modular building principle. Because of this modular building principle, our systems are compatible and the same components can be used in all our types of conveyor systems. Because of this we are able to create the highest quality, flexibility and the best conditions.

The conveyors can be supplied in aluminium or stainless steel versions. An perfect fitting multi flex plastic chain allows the system straight, horizontal and vertical running capability.

Because of this flexibility ,space saving abilities and economic use is guaranteed. The chain range is from 80 up to 200 mm wide and for product widths up to 400 mm.

Aluminium system
This conveyor system based on Aluminium profiles uses a plastic chain that permits horizontal as well as vertical change of direction. In addition to the standard types, bespoke chain links are available on request. The standard widths are 80, 140 and 200 mm.

Aluminium system

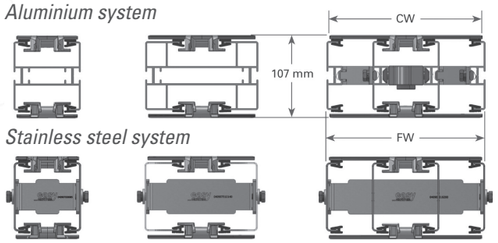

Examples of product handling:
Hugh product varieties such as :large boxes, products in soft plastic bags, for example detergent powder, wrapped tissue paper rolls, food products, personal care products packed cookies, bread, electric motors, cans, meat, fuel injectors, dry batteries, plastic bottles, matches, cheese boxes, coffee and tea packages, clean fruits ….

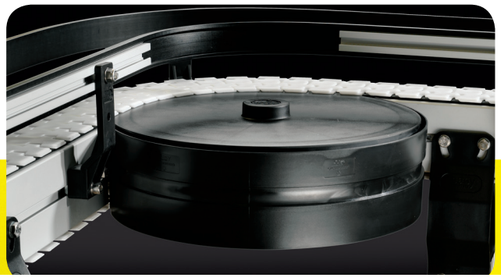

Stainless Steel System (Hygienic conveyor design)
The Stainless steel conveyor series is a conveyor which is adapted to the requirements of the food processing, pharmaceutical and hygiene industries.

The system is designed for easy integration with aluminium systems, and many chain types are available from the standard range. It is designed according to the EHEDG* guidelines. The EMBS wash down systems are suitable for hygienic solutions as industry standard conveyor systems.

The stainless steel Series is ideal for filling lines within the food, personal products and liquid pharmaceuticals branches.

*) European Hygiene Engineering and Design Group, an EU machine directive for safe and hygienic machinery.

Technical characteristics ETS series	80	140	200
Chain tension static limit	6000 N	6000 N	6000 N
Frame width (FW)	87,5 mm	147,5 mm	207,5 mm
Chain width (CW)	80 mm	140 mm	200 mm
Product width	20 - 200 mm	70 - 300 mm	100 - 400 mm
Max. conveyor length*	30 m	30 m	30 m

* depending on the lay out

More detailed information can be find in our easy conveyors components and system catalogue on our website:
www.easy-conveyors.com

THE BENEFITS FOR YOU ARE OBVIOUS:
Intelligent products for competitive prices.

The conveyor systems are manufactured in such a way that they are very easy to assemble , install and maintain with the use of simple hand tools. This means a significant saving in the assembly time costs for the dealer or in the case of self-assembling.

Our special selected and fully trained dealers are able to assist, advise or support you about all technical or commercial aspects of our products. When you want to know more about our product possibilities and prices, feel free to check our website **www.easy-conveyors.com** or contact your local dealer (part of our extensive worldwide dealer network).

Easy Conveyors offers the possibility on the website to configure different types of conveyor systems in a detailed download version in various formats (autoCad, solid works, Pro-engineer and more …)

You can integrate the created conveyor system in your own drawing files or production layouts.

Conveyor with custom made supports and side guiding.

easy ...SYSTEMS