ETS SYSTEM

easy ...SYSTEMS

Easy Systems Benelux
Noordervaart 33 | 2200 Herentals | Belgium
T: +32 (0)14/72.93.84 | F: +32 (0)14/72.93.85
info@easy-systems.be | **www.easy-systems.be**

ETS SYSTEM CONTENT

PRODUCT LEAFLETS		
Aluminium	ETS HEAD DRIVE	Page 139
Aluminium	ETS CENTER DRIVE	Page 143
Aluminium	ETS CONNECTION DRIVE	Page 147
Stainless steel	ETS HEAD DRIVE	Page 151
Stainless steel	ETS CENTER DRIVE	Page 155
Stainless steel	ETS CONNECTION DRIVE	Page 159

MODULE PAGES	
ETS CHAIN FLAT TOP	Page 164
ETS CHAIN FRICTION TOP	Page 165
ETS ALUMINIUM OPEN SIDE PROFILE 80	Page 166
ETS ALUMINIUM BEAM 80	Page 168
ETS ALUMINIUM BEAM 140	Page 170
ETS ALUMINIUM 200	Page 172
ETS STAINLESS STEEL SIDE PROFILE 80	Page 174
ETS STAINLESS STEEL SIDE PROFILE 140	Page 176
ETS STAINLESS STEEL SIDE PROFILE 200	Page 178
ETS HEAD DRIVE UNIT	Page 180
ETS CENTER DRIVE UNIT	Page 184
ETS SAG MODULE	Page 186
ETS CONNECTION DRIVE UNIT	Page 190
ETS RETURN UNIT	Page 194
ETS RETURN UNIT 90º	Page 196
ETS TRANSFER MODULE SINGLE	Page 198
ETS TRANSFER MODULE DOUBLE	Page 200
ETS HORIZONTAL CURVE 80; R=200 / R=500	Page 202
ETS HORIZONTAL CURVE 140; R=500	Page 204
ETS HORIZONTAL CURVE 200; R=500	Page 205
ETS VERTICAL CURVE STAINLESS STEEL	Page 206
ETS VERTICAL CURVE ALUMINIUM	Page 207
I SUPPORT LEGS ALUMINIUM	Page 208
L SUPPORT LEGS ALUMINIUM	Page 210
I2 SUPPORT LEGS ALUMINIUM	Page 212
L2 SUPPORT LEGS ALUMINIUM	Page 214
U SUPPORT LEGS STAINLESS STEEL	Page 216
L SUPPORT LEGS 140-200 STAINLESS STEEL	Page 218
L SUPPORT LEGS STAINLESS STEEL	Page 220
HEIGHT ADJUSTABLE LEG SUPPORT / ALU	Page 224
ETS SIDE PROFILE; FIXED	Page 226
ETS SIDE PROFILE; ADJUST	Page 228
ETS SIDE PROFILE; FIXED STAINLESS STEEL	Page 230
ETS SIDE PROFILE; ADJUST STAINLESS STEEL	Page 232
ETS TECHNICAL MANUAL	Page 234

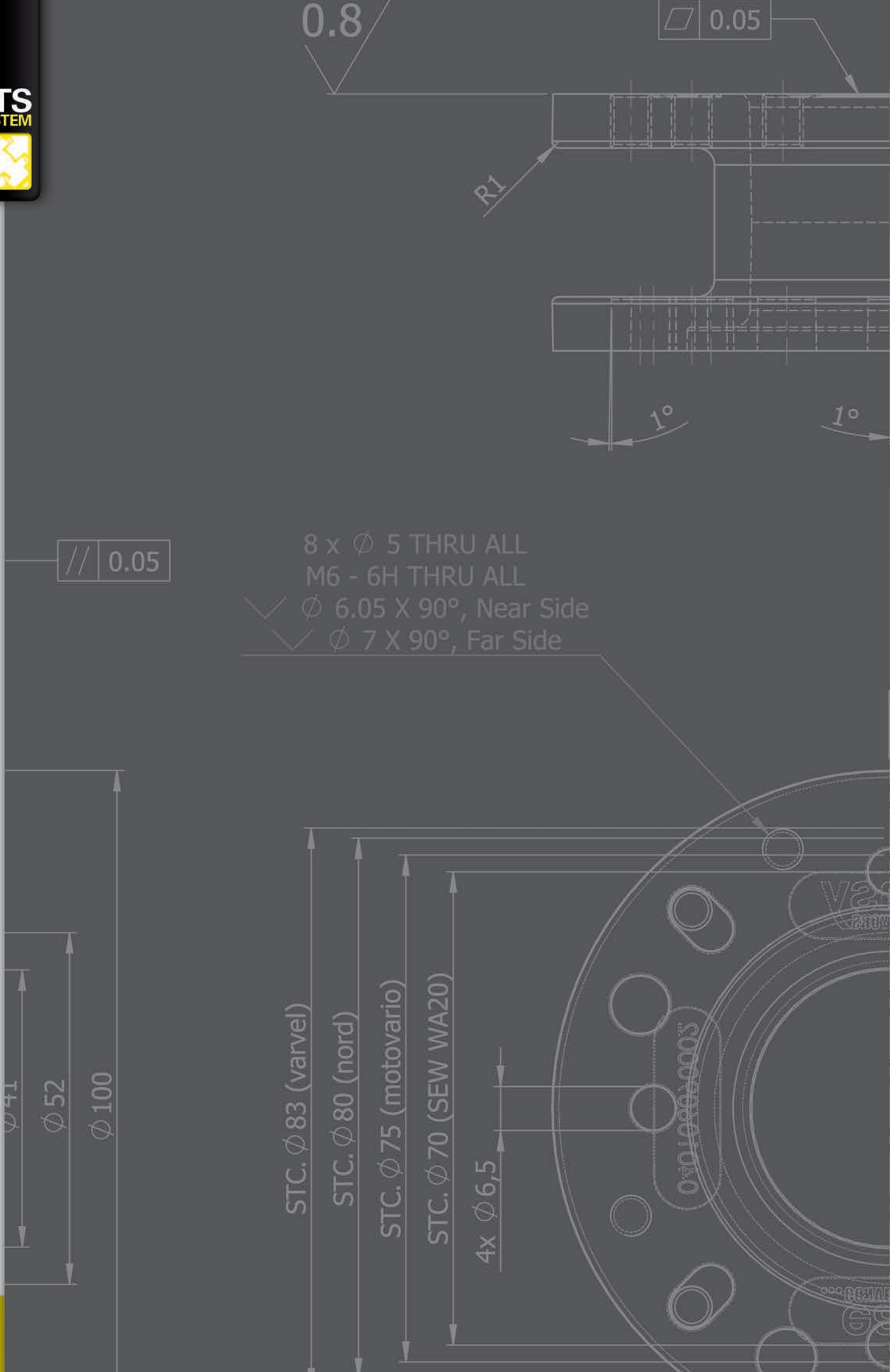
0.8
0.05
R1
1°
1°
0.05
8 x ∅ 5 THRU ALL
M6 - 6H THRU ALL
∅ 6.05 X 90°, Near Side
∅ 7 X 90°, Far Side
∅ 41
∅ 52
∅ 100
STC. ∅ 83 (varvel)
STC. ∅ 80 (nord)
STC. ∅ 75 (motovario)
STC. ∅ 70 (SEW WA20)
4x ∅ 6,5

ETS SYSTEM

Table Top Conveyor
Kettenförderer
Conveyeur de table
Transportador de charnelas

ETS HEAD DRIVE

ALUMINIUM

easy ...SYSTEMS

ETS HEAD DRIVE

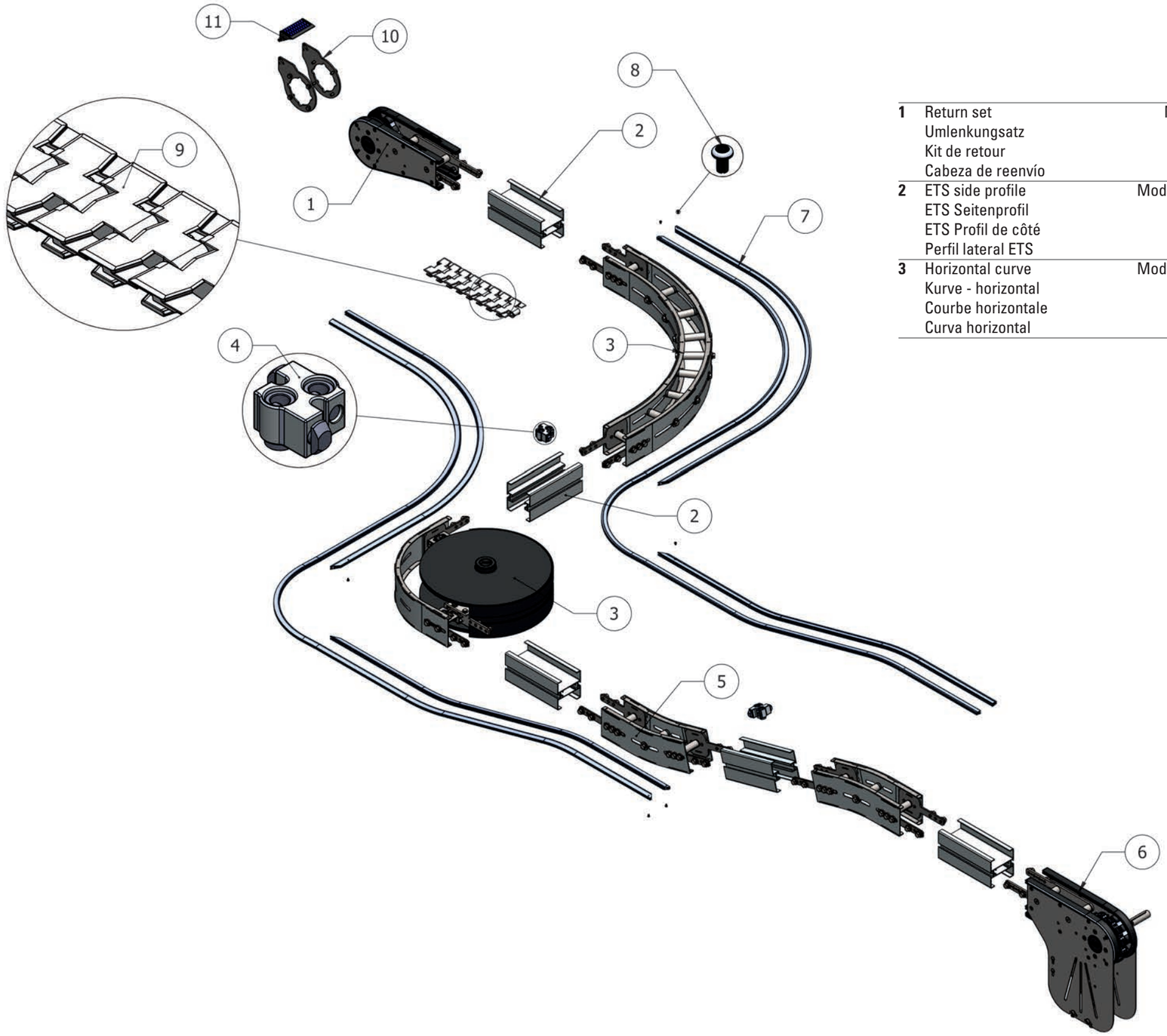

1	Return set Umlenkungsatz Kit de retour Cabeza de reenvío	Module page 194
2	ETS side profile ETS Seitenprofil ETS Profil de côté Perfil lateral ETS	Module page 166-168
3	Horizontal curve Kurve - horizontal Courbe horizontale Curva horizontal	Module page 202-205
4	Straight connector Längsverbinder Connecteur droit Conector longitudinal	Module page 166-173
5	Vertical curve Kurve - vertikal Courbe verticale Curva vertical	Module page 207
6	Head drive set Kopfantrieb - Satz Ensemble Entraînement Direct Cabeza de tracción, juego	Module page 180
7	Slide profile Gleitprofil Glissez le profil Perfil de deslizamiento	Module page 166-173
8	Rokut rivet Kunstoff Popnail Popnail en plastique Popnail plástico	Module page 166-173
9	ETS Chain ETS Kette ETS chaîne Cadena ETS	Module page 164-165
10	Transfer module Transfer-Modul Module de transfer Módulo de transferencia	Module page 198-201
11	Transfer plate Transferplatte Plaque de transfer Transferencia placa	Module page 198-201

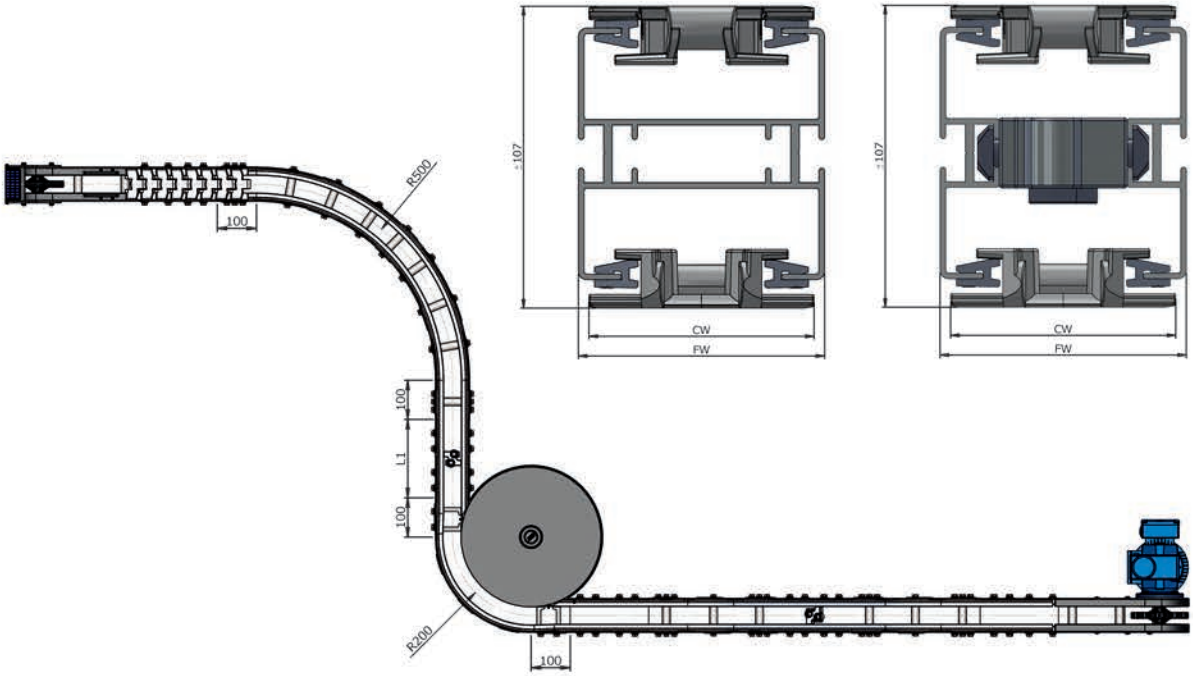

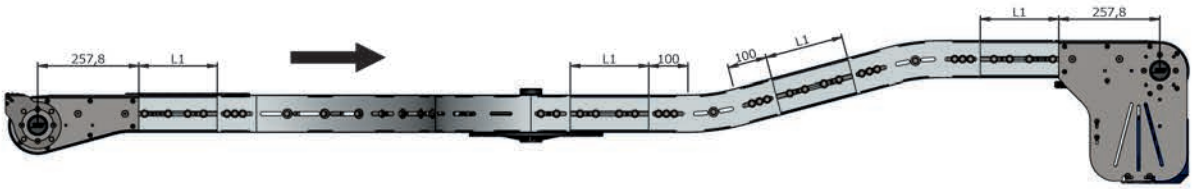

ETS HEAD DRIVE	Dimensions - Abmessungen - Dimensions - Dimensiones			
L =	Max. total +/- 30 mtr. | 98.42 Foot			Longer on request
L1 =	Min. 200 mm I 7,87" inch			
FW =	**87,5**	**147,5**	**207,5 mm**	
	3,44"	5,80"	8,17" inch	
CW =	**80**	**140**	**200 mm**	
	3,14"	5,51"	7,87" inch	
V ≈	Max. 45 mtr./min | 148 Foot/min			
Max. Torque, Couple, Esfuerzo de torsion, Drehmoment				141 Nm
Breaking load, Bruchlast, Charge de rupture, Carga de rotura				3000N (dynamic)
Support legs, Stützen, Supports, Patas de apoyo				Module page 208-215/224-225
Side guiding, Seitenführungen, Guidage latéral, Guiado lateral				Module page 226-229

Others on request, Andere auf Anfrage, Autres sur demande, Otros sobre consulta

ETS SYSTEM

Table Top Conveyor
Kettenförderer
Conveyeur de table
Transportador de charnelas

ETS CENTER DRIVE

ALUMINIUM

easy ...SYSTEMS

ETS CENTER DRIVE

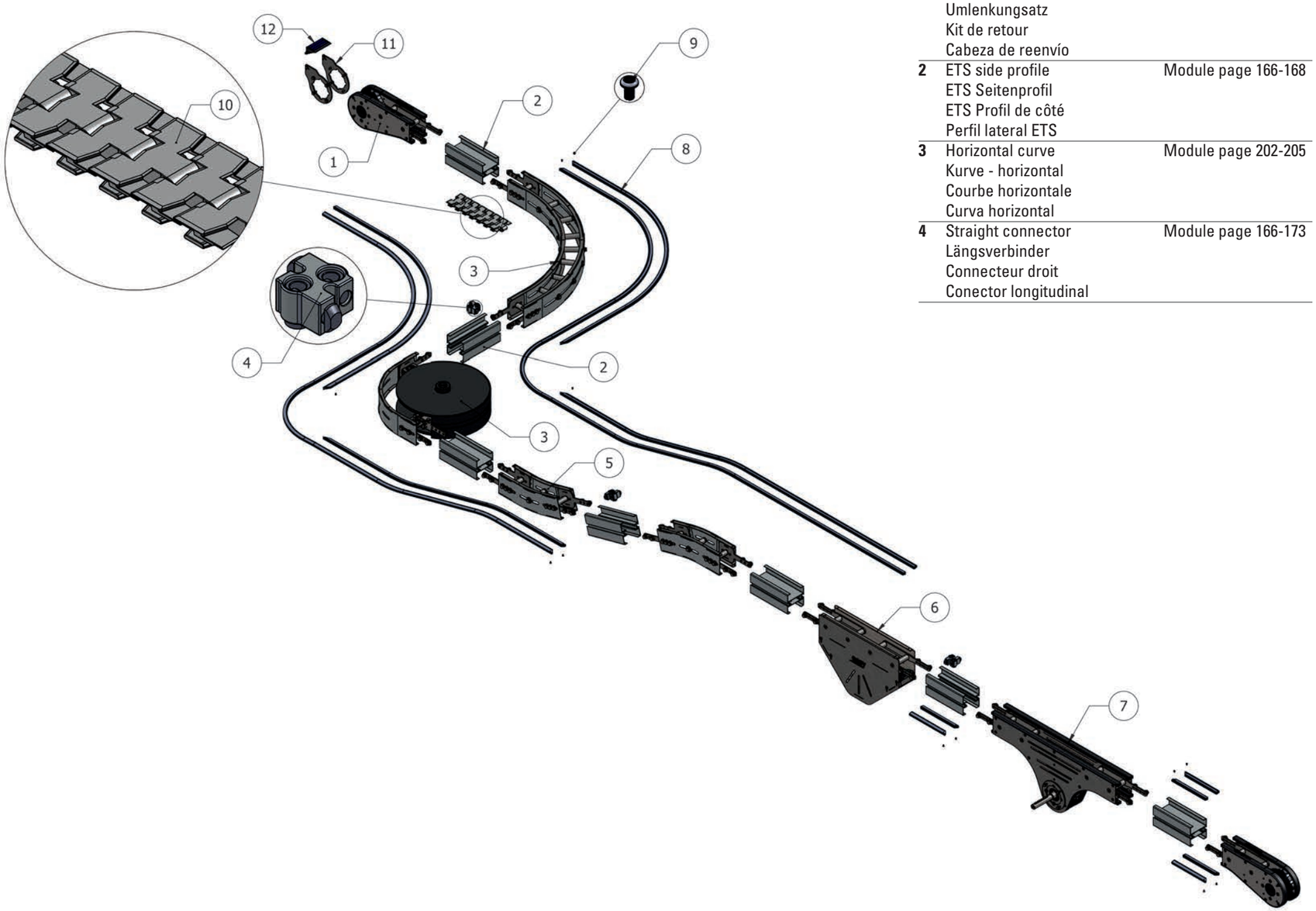

1	Return set Umlenkungsatz Kit de retour Cabeza de reenvío	Module page 194
2	ETS side profile ETS Seitenprofil ETS Profil de côté Perfil lateral ETS	Module page 166-168
3	Horizontal curve Kurve - horizontal Courbe horizontale Curva horizontal	Module page 202-205
4	Straight connector Längsverbinder Connecteur droit Conector longitudinal	Module page 166-173
5	Vertical curve Kurve - vertikal Courbe verticale Curva vertical	Module page 207
6	Sag module Sag modul s'affaiser module de Módulo sag	Module page 186
7	Center drive set Mittiger Antrieb - Satz Ensemble Entraînement Intermédiaire Accionamiento central, juego	Module page 184
8	Slide profile Gleitprofil Glissez le profil Perfil de deslizamiento	Module page 166-173
9	Rokut rivet Kunstoff Popnail Popnail en plastique Popnail plástico	Module page 166-173
10	ETS Chain ETS Kette ETS chaîne Cadena ETS	Module page 164-165
11	Transfer module Transfer-Modul Module de transfer Módulo de transferencia	Module page 198-201
12	Transfer plate Transferplatte Plaque de transfer Transferencia placa	Module page 198-201

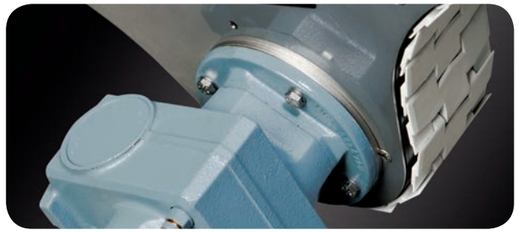

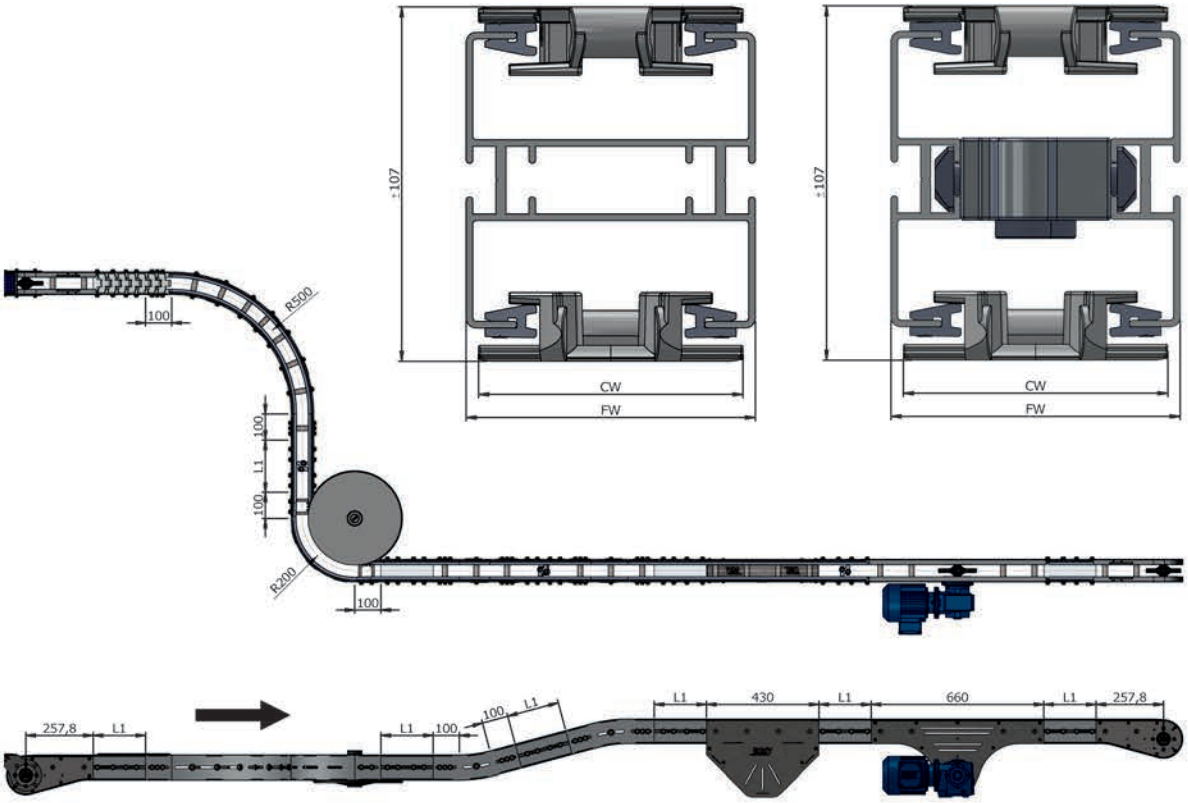

ETS CENTER DRIVE	Dimensions - Abmessungen - Dimensions - Dimensiones			
L =	Max. total +/- 30 mtr. | 98.42 Foot			Longer on request
L1 =	Min. 200 mm I 7,87" inch			
FW =	**87,5**	**147,5**	**207,5 mm**	
	3,44"	5,80"	8,17" inch	
CW =	**80**	**140**	**200 mm**	
	3,14"	5,51"	7,87" inch	
V ≈	Max. 45 mtr./min | 148 Foot/min			
Max. Torque, Couple, Esfuerzo de torsion, Drehmoment				141 Nm
Breaking load, Bruchlast, Charge de rupture, Carga de rotura				3000N (dynamic)
Support legs, Stützen, Supports, Patas de apoyo				Module page 208-215/224-225
Side guiding, Seitenführungen, Guidage latéral, Guiado lateral				Module page 226-229

Others on request, Andere auf Anfrage, Autres sur demande, Otros sobre consulta

ETS SYSTEM

Table Top Conveyor
Kettenförderer
Conveyeur de table
Transportador de charnelas

ETS CONNECTION DRIVE

ALUMINIUM

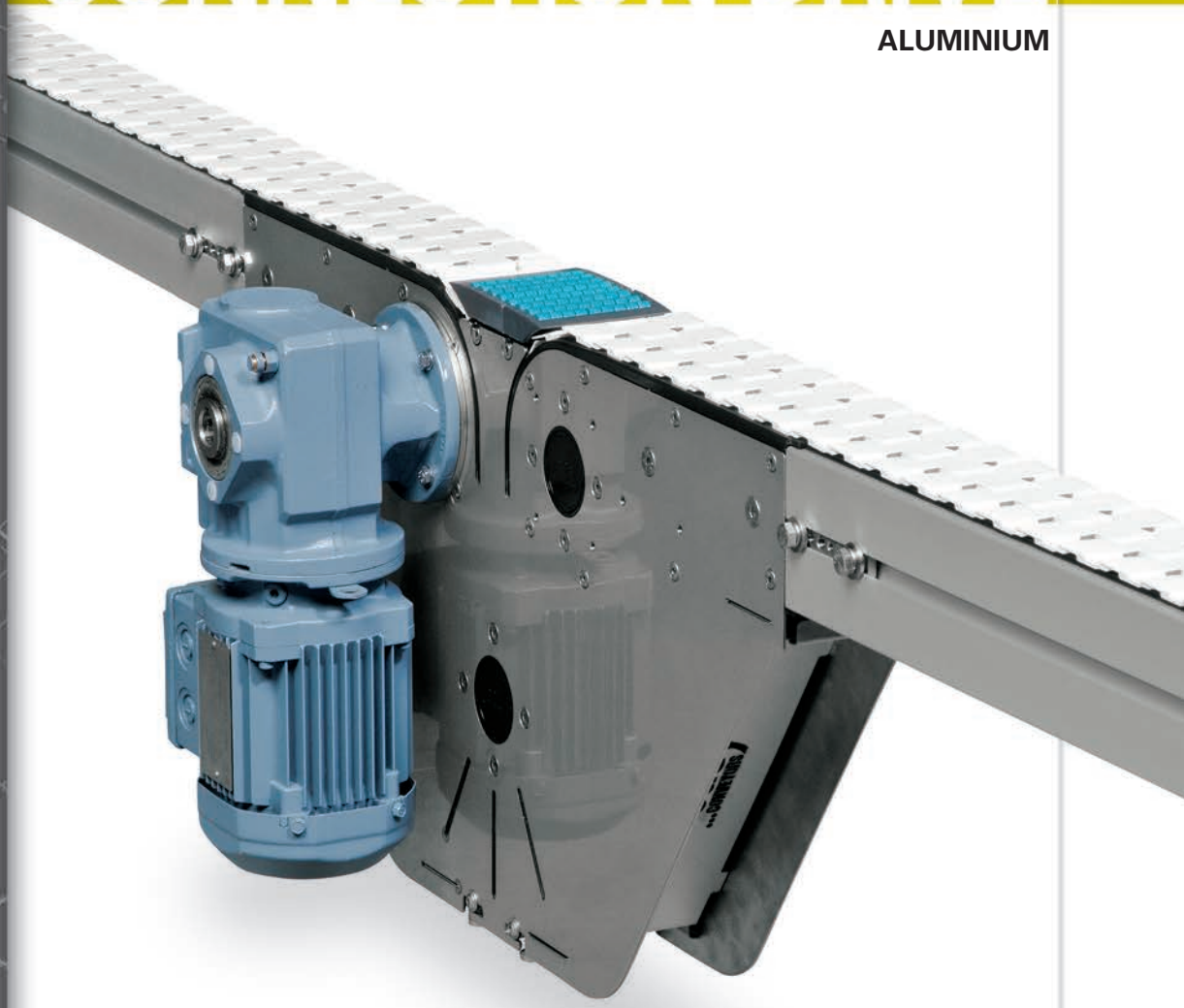

easy ...SYSTEMS

ETS CONNECTION DRIVE

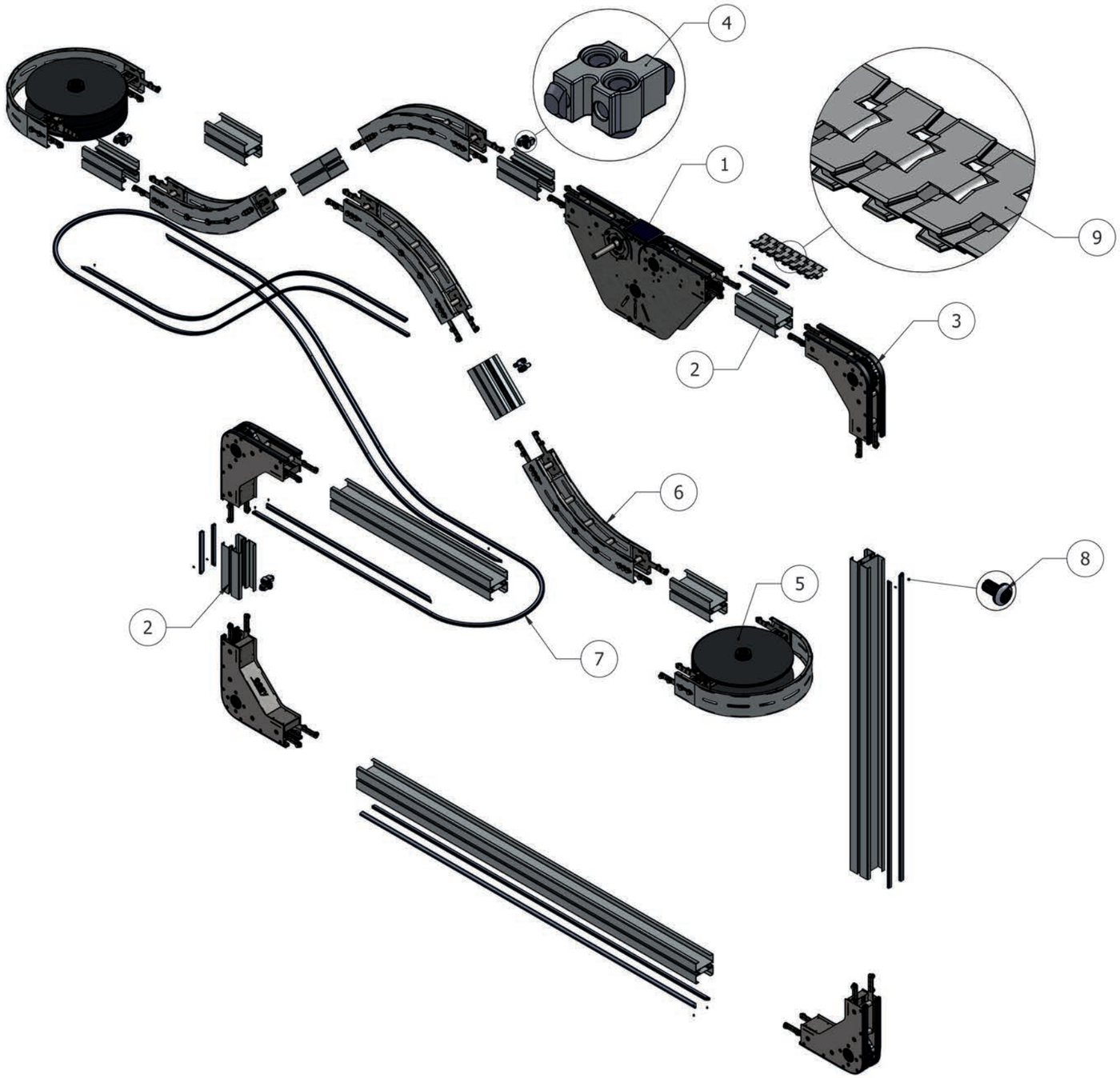

1	Connection drive set Connection Antrieb d'entraînement de connexion Conexión de la unidad	Module page 190
2	ETS side profile ETS Seitenprofil ETS Profil de côté Perfil lateral ETS	Module page 166-168
3	Return set 90° Umlenkung 90° Ensemble de retour 90° reenvío 90°, juego	Module page 196
4	Straight connector Längsverbinder Connecteur droit Conector longitudinal	Module page 166-173
5	Horizontal curve Kurve - horizontal Courbe horizontale Curva horizontal	Module page 202-205
6	Vertical curve Kurve - vertikal Courbe verticale Curva vertical	Module page 207
7	Slide profile Gleitprofil Glissez le profil Perfil de deslizamiento	Module page 166-173
8	Rokut rivet Kunstoff Popnail Popnail en plastique Popnail plástico	Module page 166-173
9	ETS Chain ETS Kette ETS chaîne Cadena ETS	Module page 164-165

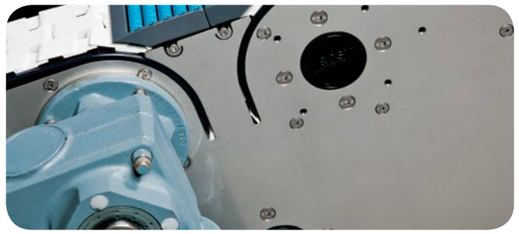

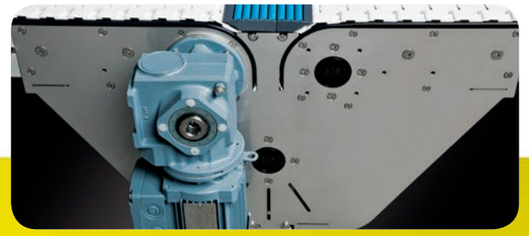

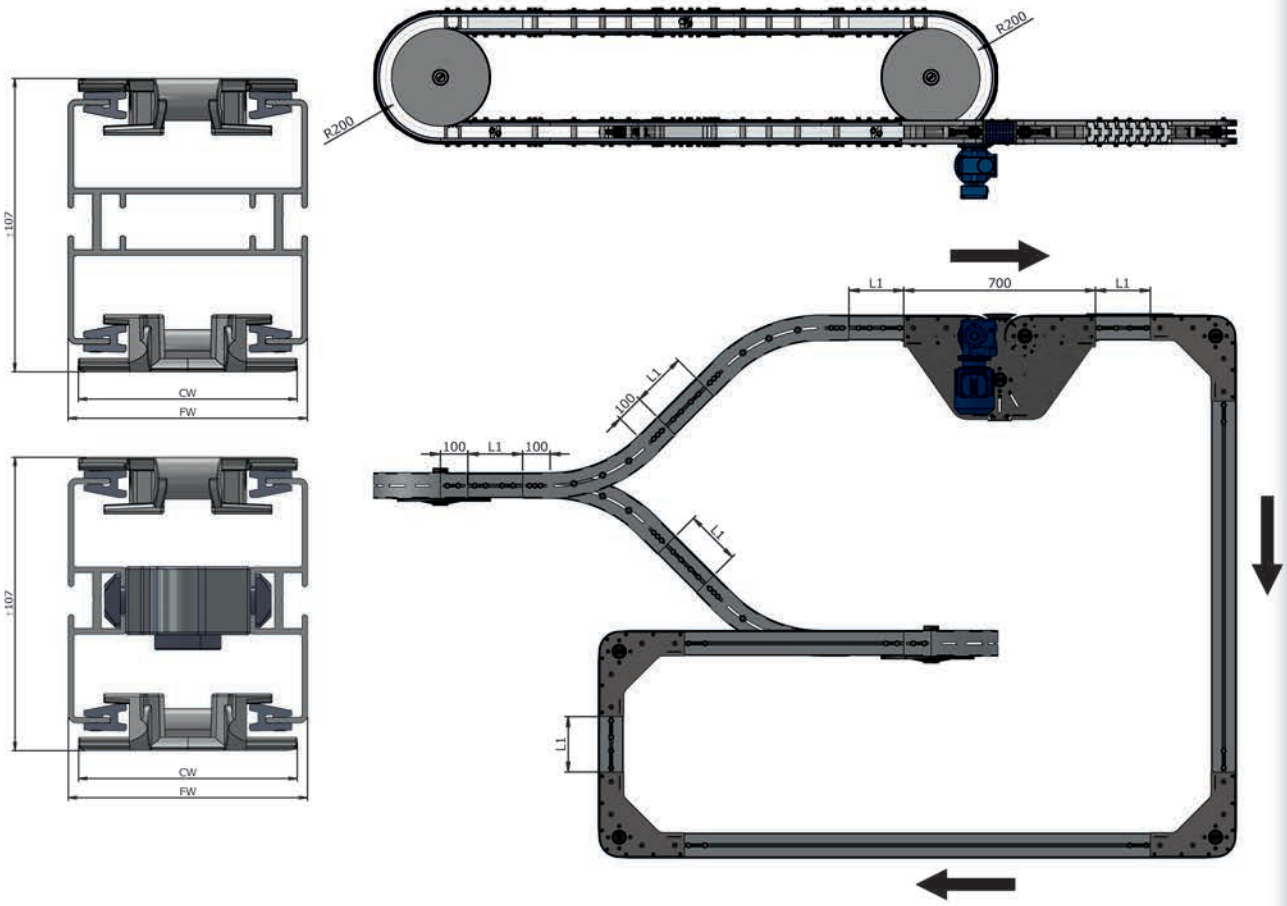

ETS CONNECTION DRIVE	Dimensions - Abmessungen - Dimensions - Dimensiones			
L =	Max. total +/- 60 mtr. | 196.85 Foot			Longer on request
L1 =	Min. 200 mm I 7,87" inch			
FW =	**87,5**	**147,5**	**207,5 mm**	
	3,44"	5,80"	8,17" inch	
CW =	**80**	**140**	**200 mm**	
	3,14"	5,51"	7,87" inch	
V ≈	Max. 45 mtr./min | 148 Foot/min			
Max. Torque, Couple, Esfuerzo de torsion, Drehmoment				141 Nm
Breaking load, Bruchlast, Charge de rupture, Carga de rotura				3000N (dynamic)
Support legs, Stützen, Supports, Patas de apoyo				Module page 208-215/224-225
Side guiding, Seitenführungen, Guidage latéral, Guiado lateral				Module page 226-229

Others on request, Andere auf Anfrage, Autres sur demande, Otros sobre consulta

ETS SYSTEM

Table Top Conveyor
Kettenförderer
Conveyeur de table
Transportador de charnelas

ETS HEAD DRIVE

STAINLESS STEEL

easy ...SYSTEMS

ETS HEAD DRIVE

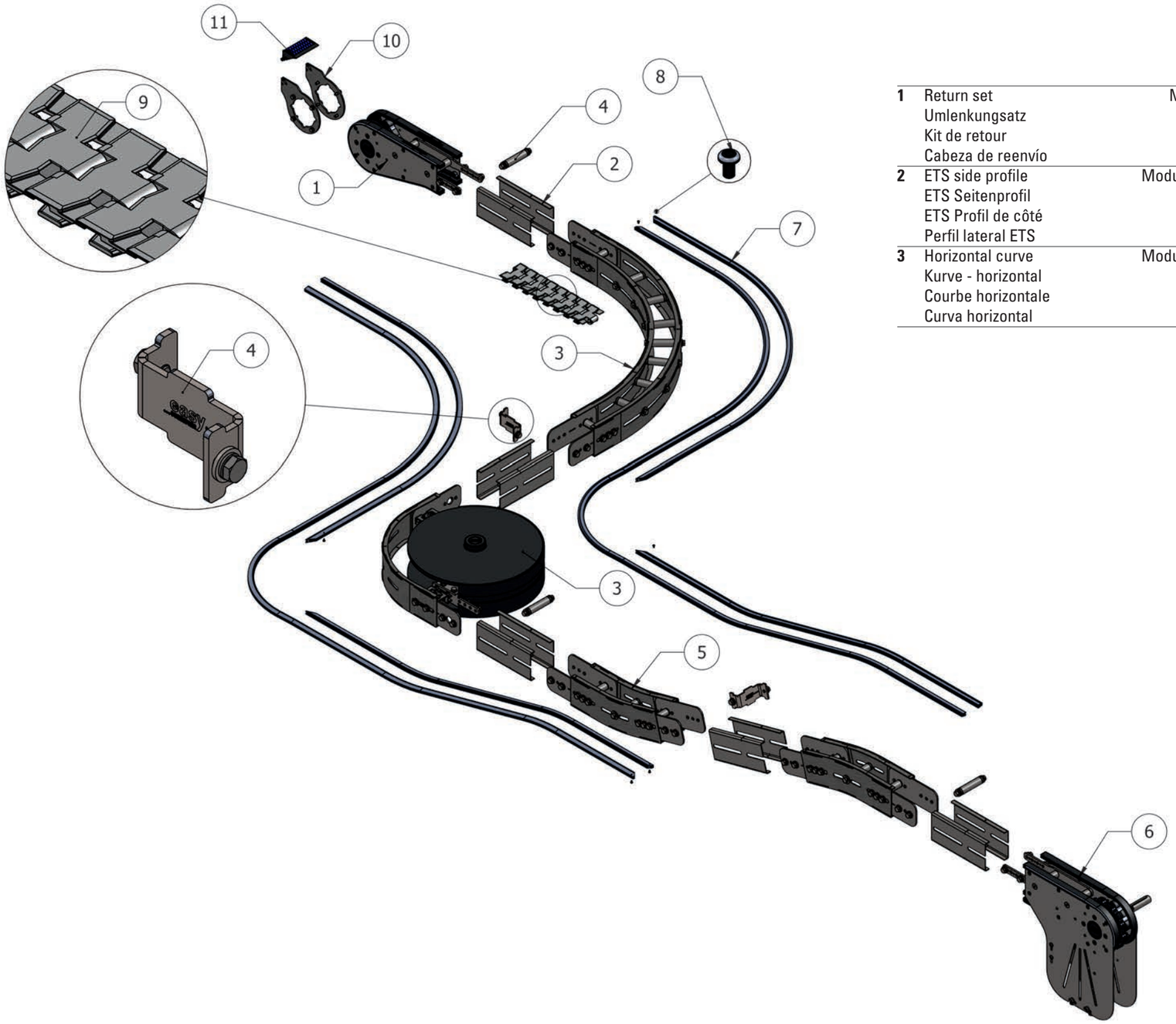

1	Return set Umlenkungsatz Kit de retour Cabeza de reenvío	Module page 194
2	ETS side profile ETS Seitenprofil ETS Profil de côté Perfil lateral ETS	Module page 174-179
3	Horizontal curve Kurve - horizontal Courbe horizontale Curva horizontal	Module page 202-205
4	Straight connector Längsverbinder Connecteur droit Conector longitudinal	Module page 174-179
5	Vertical curve Kurve - vertikal Courbe verticale Curva vertical	Module page 206
6	Head drive set Kopfantrieb - Satz Ensemble Entraînement Direct Cabeza de tracción, juego	Module page 180
7	Slide profile Gleitprofil Glissez le profil Perfil de deslizamiento	Module page 174-179
8	Rokut rivet Kunstoff Popnail Popnail en plastique Popnail plástico	Module page 174-179
9	ETS Chain ETS Kette ETS chaîne Cadena ETS	Module page 164-165
10	Transfer module Transfer-Modul Module de transfer Módulo de transferencia	Module page 198-201
11	Transfer plate Transferplatte Plaque de transfer Transferencia placa	Module page 198-201

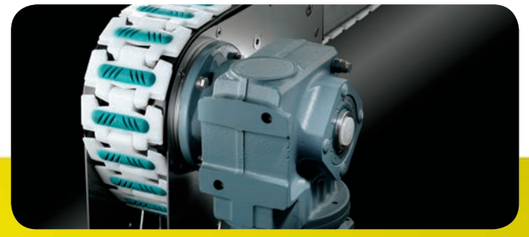

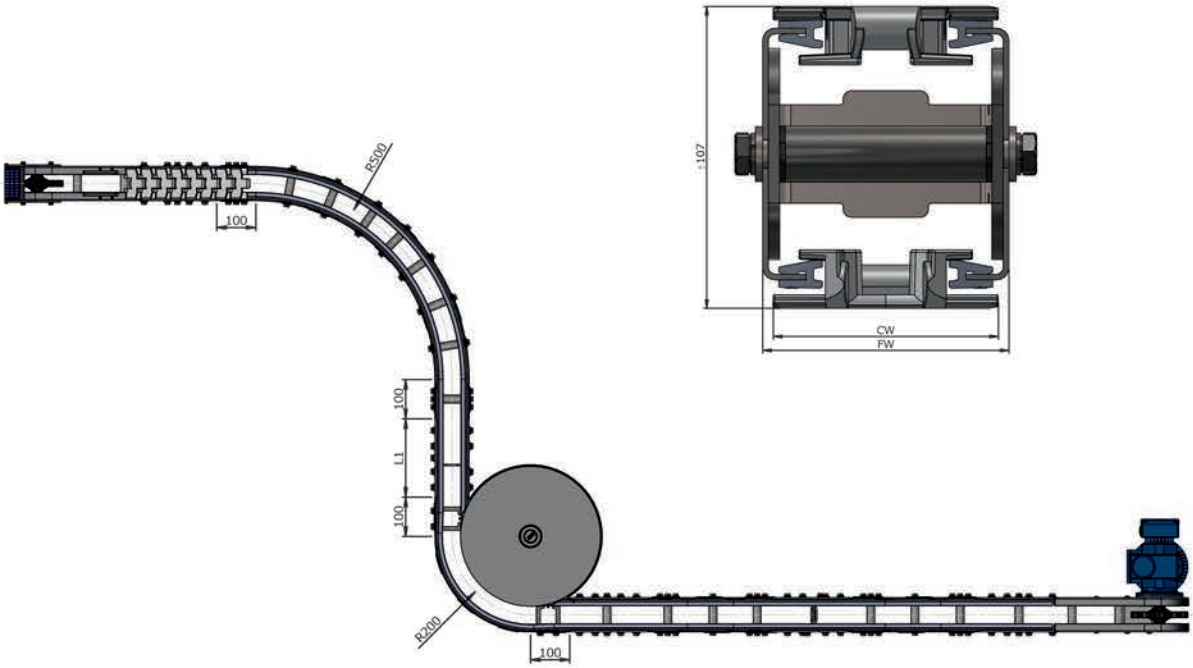

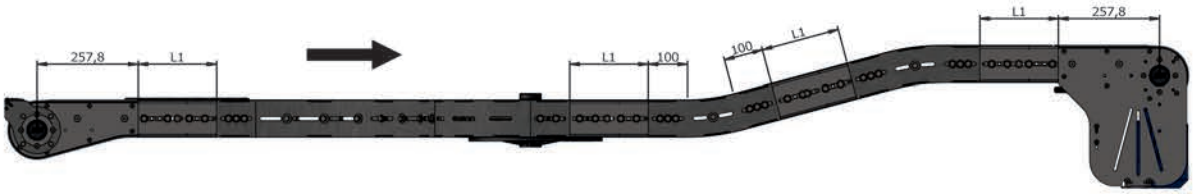

ETS HEAD DRIVE	Dimensions - Abmessungen - Dimensions - Dimensiones			
L =	Max. total +/- 30 mtr. | 98.42 Foot			Longer on request
L1 =	Min. 200 mm I 7,87" inch			
FW =	**87,5**	**147,5**	**207,5 mm**	
	3,44"	5,80"	8,17" inch	
CW =	**80**	**140**	**200 mm**	
	3,14"	5,51"	7,87" inch	
V ≈	Max. 45 mtr./min | 148 Foot/min			
Max. Torque, Couple, Esfuerzo de torsion, Drehmoment				141 Nm
Breaking load, Bruchlast, Charge de rupture, Carga de rotura				3000N (dynamic)
Support legs, Stützen, Supports, Patas de apoyo				Module page 216-221
Side guiding, Seitenführungen, Guidage latéral, Guiado lateral				Module page 230-233

Others on request, Andere auf Anfrage, Autres sur demande, Otros sobre consulta

ETS SYSTEM

Table Top Conveyor
Kettenförderer
Conveyeur de table
Transportador de charnelas

ETS CENTER DRIVE

STAINLESS STEEL

easy ...SYSTEMS

ETS CENTER DRIVE

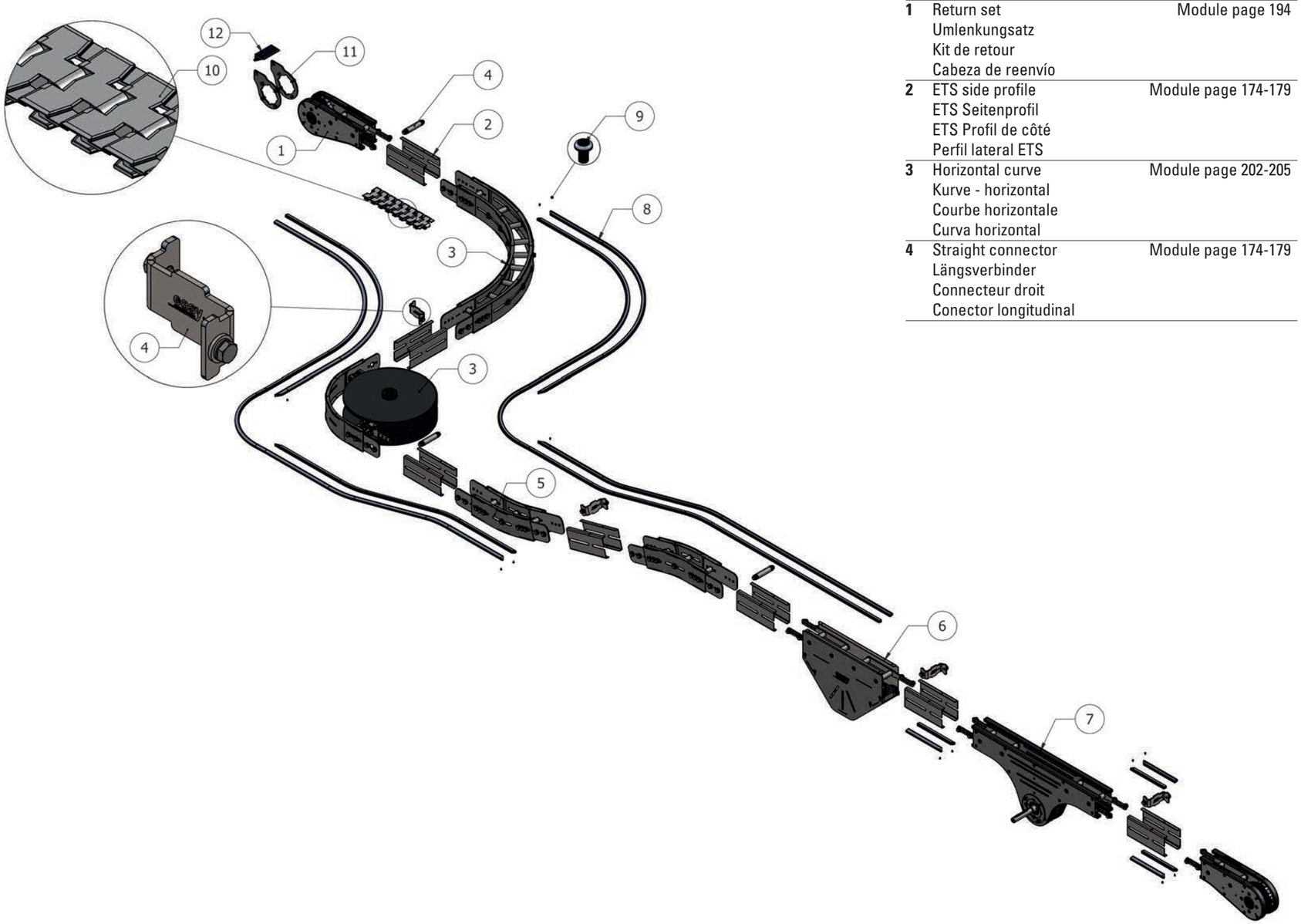

1	Return set Umlenkungsatz Kit de retour Cabeza de reenvío	Module page 194
2	ETS side profile ETS Seitenprofil ETS Profil de côté Perfil lateral ETS	Module page 174-179
3	Horizontal curve Kurve - horizontal Courbe horizontale Curva horizontal	Module page 202-205
4	Straight connector Längsverbinder Connecteur droit Conector longitudinal	Module page 174-179
5	Vertical curve Kurve - vertikal Courbe verticale Curva vertical	Module page 206
6	Sag module Sag modul s'affaiser module de Módulo sag	Module page 186
7	Center drive set Mittiger Antrieb - Satz Ensemble Entraînement Intermédiaire Accionamiento central, juego	Module page 184
8	Slide profile Gleitprofil Glissez le profil Perfil de deslizamiento	Module page 174-179
9	Rokut rivet Kunstoff Popnail Popnail en plastique Popnail plástico	Module page 174-179
10	ETS Chain ETS Kette ETS chaîne Cadena ETS	Module page 164-165
11	Transfer module Transfer-Modul Module de transfer Módulo de transferencia	Module page 198-201
12	Transfer plate Transferplatte Plaque de transfer Transferencia placa	Module page 198-201

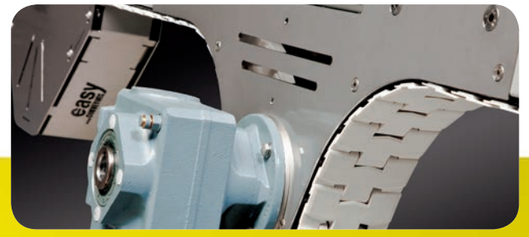

easy ...SYSTEMS

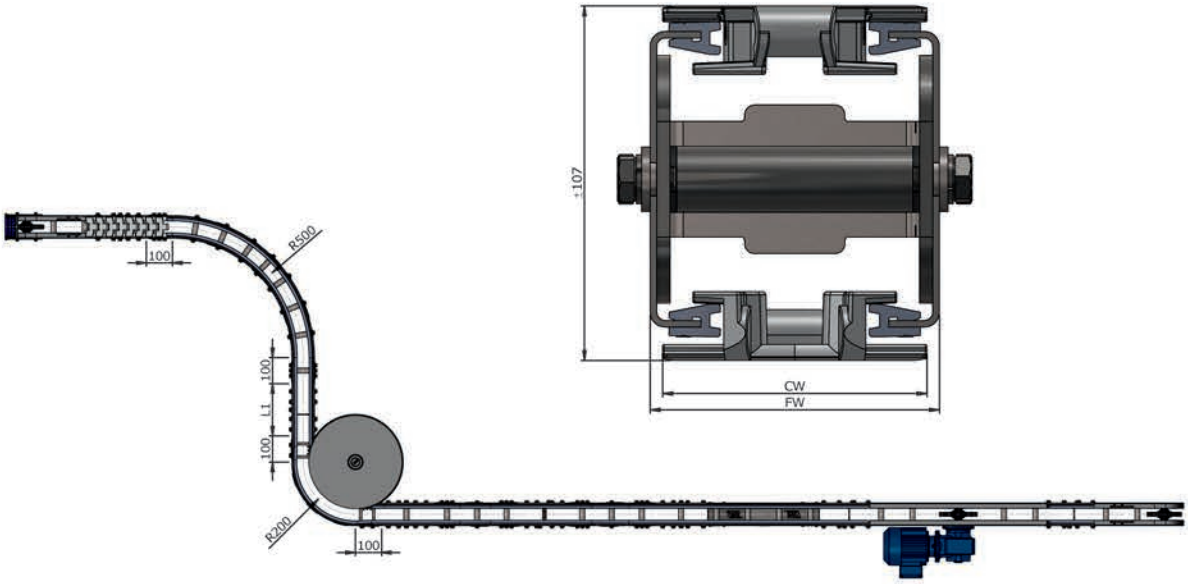

ETS CENTER DRIVE	Dimensions - Abmessungen - Dimensions - Dimensiones			
L =	Max. total +/- 30 mtr. | 98.42 Foot			Longer on request
L1 =	Min. 200 mm I 7,87" inch			
FW =	**87,5**	**147,5**	**207,5 mm**	
	3,44"	5,80"	8,17" inch	
CW =	**80**	**140**	**200 mm**	
	3,14"	5,51"	7,87" inch	
V ≈	Max. 45 mtr./min | 148 Foot/min			
Max. Torque, Couple, Esfuerzo de torsion, Drehmoment				141 Nm
Breaking load, Bruchlast, Charge de rupture, Carga de rotura				3000N (dynamic)
Support legs, Stützen, Supports, Patas de apoyo				Module page 216-221
Side guiding, Seitenführungen, Guidage latéral, Guiado lateral				Module page 230-233

Others on request, Andere auf Anfrage, Autres sur demande, Otros sobre consulta

ETS SYSTEM

Table Top Conveyor
Kettenförderer
Conveyeur de table
Transportador de charnelas

ETS CONNECTION DRIVE

STAINLESS STEEL

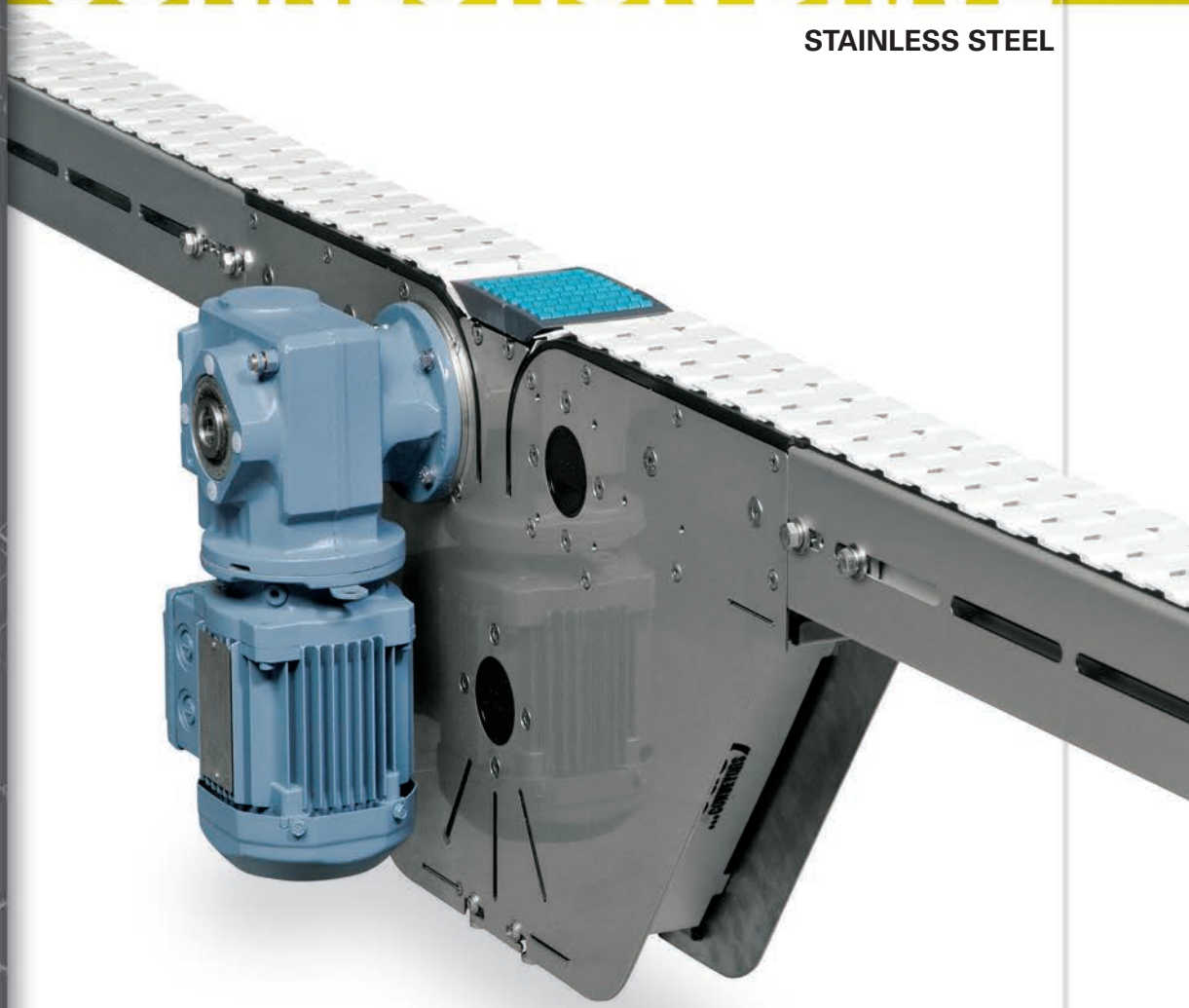

easy ...SYSTEMS

ETS CONNECTION DRIVE

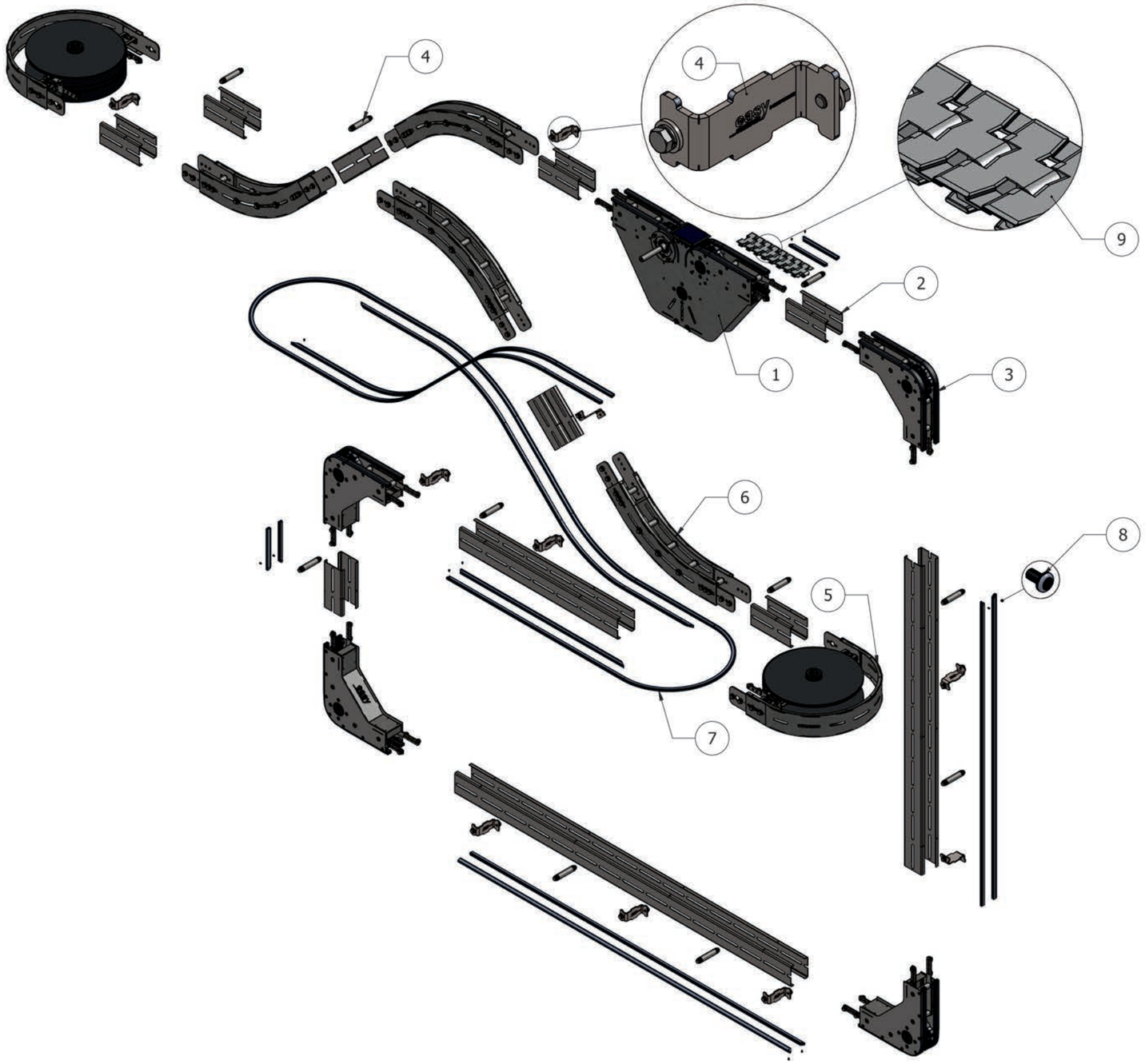

easy ...SYSTEMS

1	Connection drive set Connection Antrieb d'entraînement de connexion Conexión de la unidad	Module page 190
2	ETS side profile ETS Seitenprofil ETS Profil de côté Perfil lateral ETS	Module page 174-179
3	Return set 90° Umlenkung 90° Ensemble de retour 90° reenvío 90°, juego	Module page 196
4	Straight connector Längsverbinder Connecteur droit Conector longitudinal	Module page 174-179
5	Horizontal curve Kurve - horizontal Courbe horizontale Curva horizontal	Module page 202-205
6	Vertical curve Kurve - vertikal Courbe verticale Curva vertical	Module page 206
7	Slide profile Gleitprofil Glissez le profil Perfil de deslizamiento	Module page 174-179
8	Rokut rivet Kunstoff Popnail Popnail en plastique Popnail plástico	Module page 174-179
9	ETS Chain ETS Kette ETS chaîne Cadena ETS	Module page 164-165

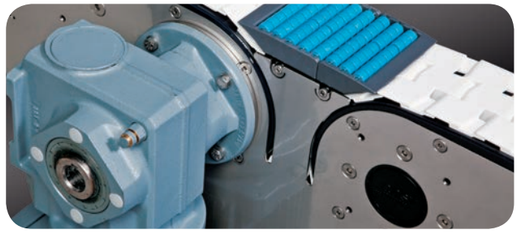

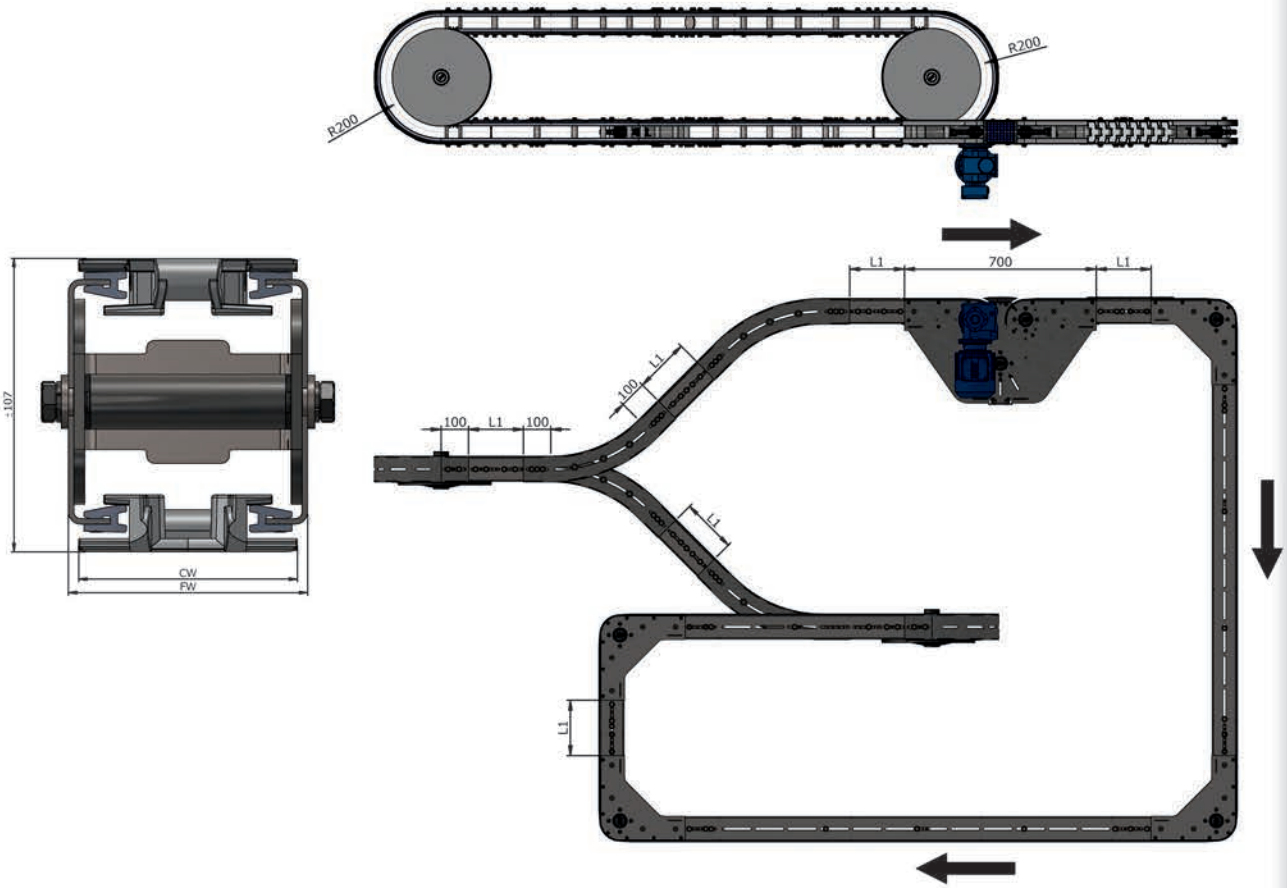

ETS CONNECTION DRIVE	Dimensions - Abmessungen - Dimensions - Dimensiones			
L =	Max. total +/- 60 mtr. | 196.85 Foot			Longer on request
L1 =	Min. 200 mm I 7,87" inch			
FW =	**87,5**	**147,5**	**207,5 mm**	
	3,44"	5,80"	8,17" inch	
CW =	**80**	**140**	**200 mm**	
	3,14"	5,51"	7,87" inch	
V ≈	Max. 45 mtr./min | 148 Foot/min			
Max. Torque, Couple, Esfuerzo de torsion, Drehmoment				141 Nm
Breaking load, Bruchlast, Charge de rupture, Carga de rotura				3000N (dynamic)
Support legs, Stützen, Supports, Patas de apoyo				Module page 216-221
Side guiding, Seitenführungen, Guidage latéral, Guiado lateral				Module page 230-233

Others on request, Andere auf Anfrage, Autres sur demande, Otros sobre consulta

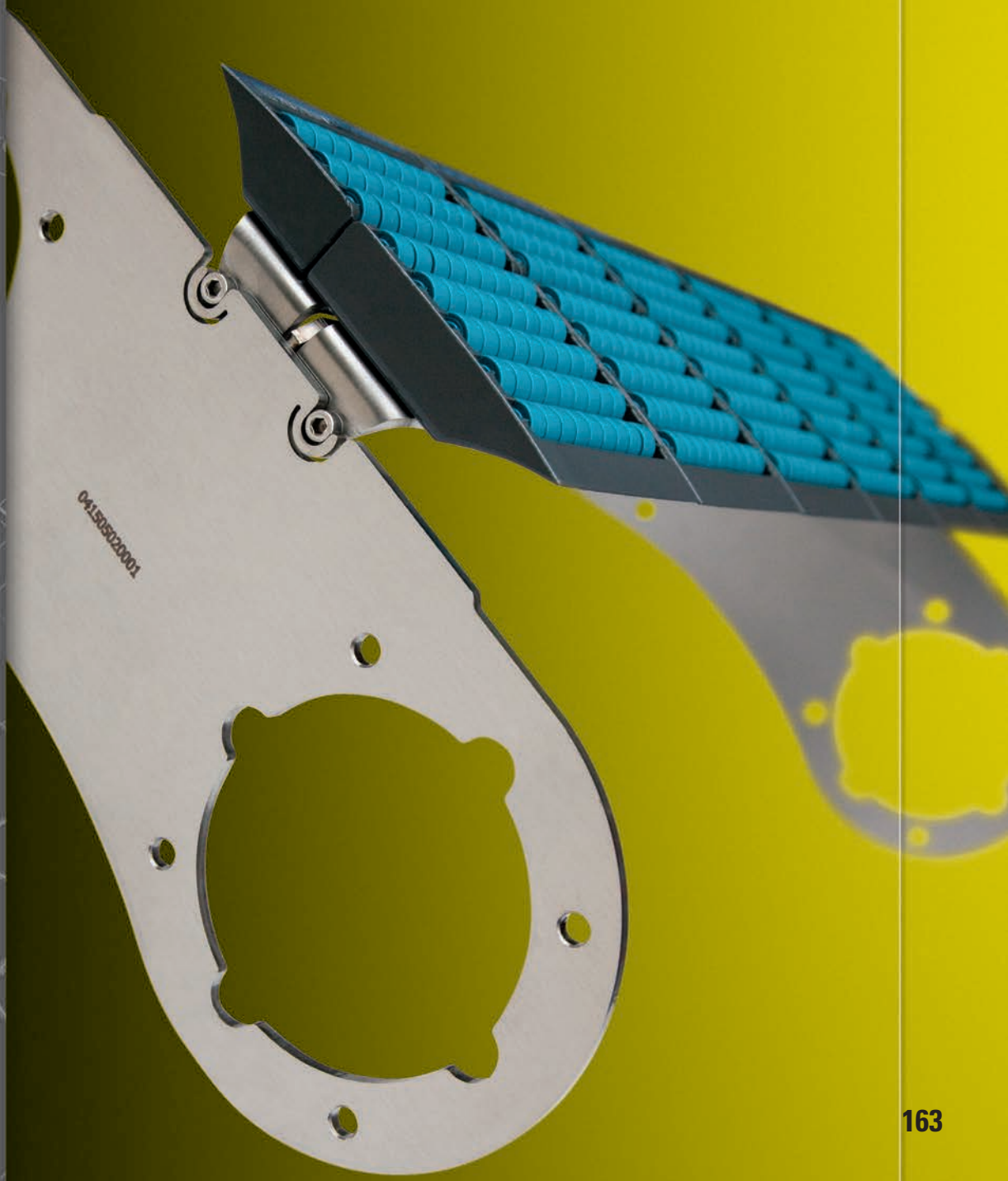
04150502000 1

ETS CHAIN FLAT TOP

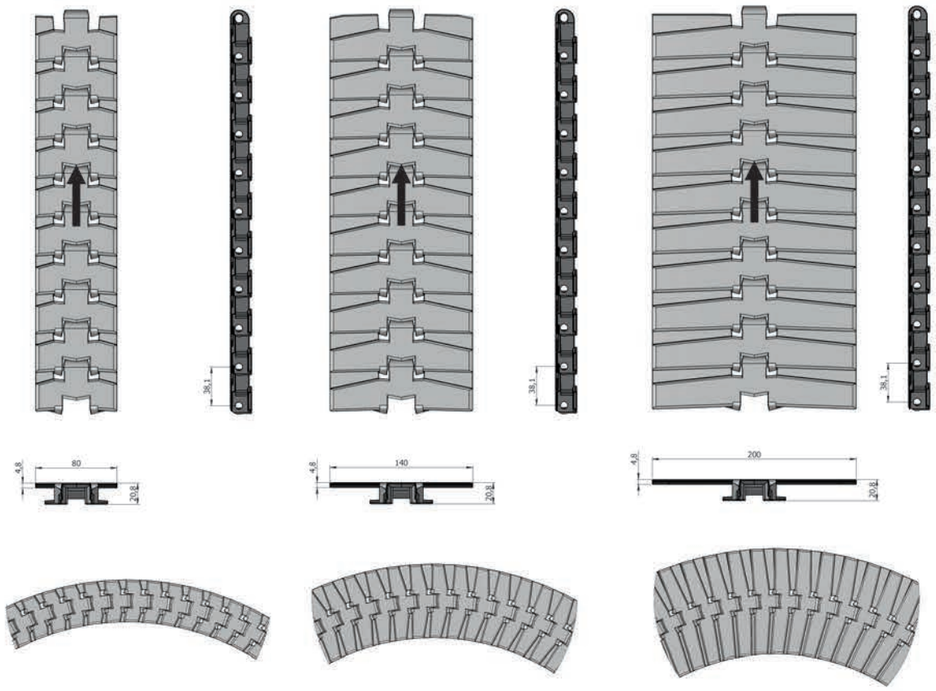

	Dimensions - Abmessungen - Dimensions - Dimensiones
Material	LFW (low friction acetal resin), Reibungsarmer Acetal Faible coefficient de frottement acétal, Acetal de baja fricción
Color	White, Weiß, Blanc, Blanco
Pin **Material**	Austentic steel, Edelstahl, Acier inoxydable, Acero inoxidable
Package	1 box; L=3 mtr

BW	Code	Breaking load (static)	Weight	Radius
80	ETP040802000085	6000 N	1.05 Kg/mtr	200
140	ETP040802000140	6000 N	1.32 Kg/mtr	500
200	ETP040802000200	6000 N	1.62 Kg/mtr	500

Others on request, Andere auf Anfrage,
Autres sur demande, Otros sobre consulta

ETS CHAIN FRICTION TOP

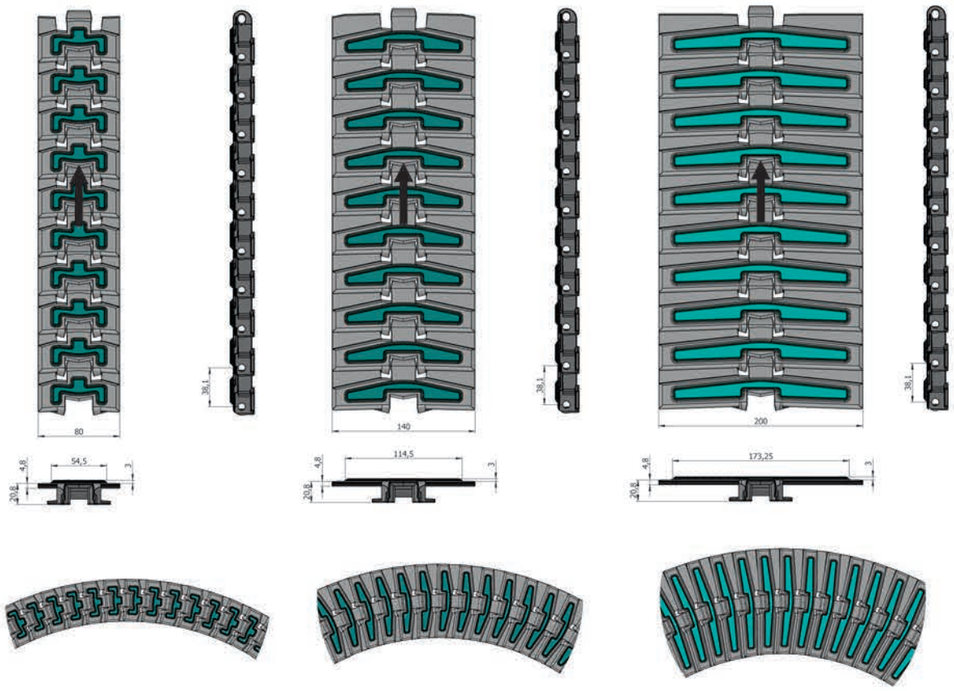

	Dimensions - Abmessungen - Dimensions - Dimensiones
Material	LFW (low friction acetal resin), Reibungsarmer Acetal Faible coefficient de frottement acétal, Acetal de baja fricción
Color	White, Weiß, Blanc, Blanco
Friction top	Thermoplastic rubber, Thermoplastischem Gummi Cautchouc thermoplastique, Caucho termoplástico
Color	Blue, Blau, Bleu, Azul
Pin **Material**	Austentic steel, Edelstahl, Acier inoxydable, Acero inoxidable
Package	1 box; L=3 mtr

BW	Code	Breaking load (static)	Weight	Radius
80	ETP040802010085	5000 N	1.15 Kg/mtr	200
140	ETP040802010140	5000 N	1.43 Kg/mtr	500
200	ETP040802010200	5000 N	1.75 Kg/mtr	500

Others on request, Andere auf Anfrage,
Autres sur demande, Otros sobre consulta

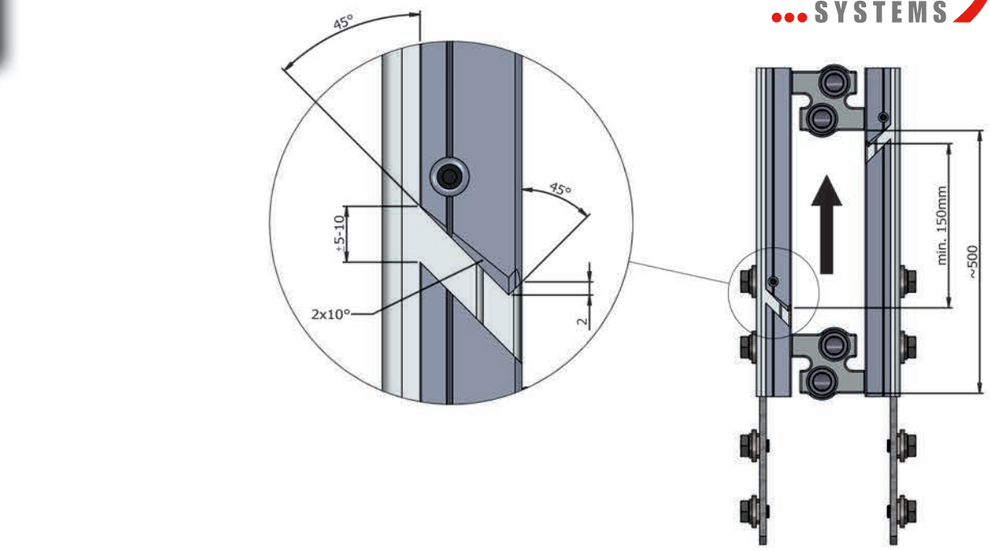

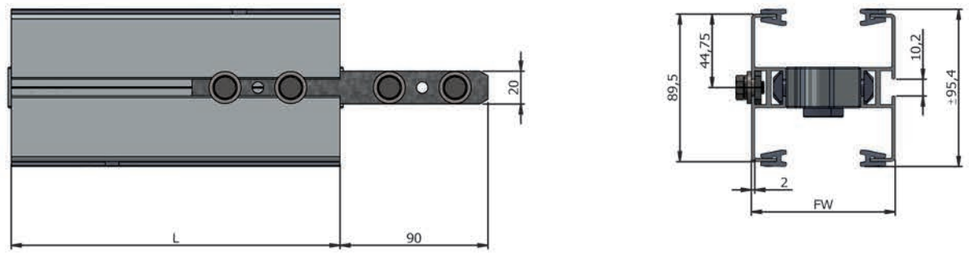

Dimensions - Abmessungen - Dimensions - Dimensiones

	FW =		L =	
ETS ALUMINIUM 80	87,5 mm	3,44" inch	5,6 mtr.	18.37 Foot

Others on request, Andere auf Anfrage,
Autres sur demande, Otros sobre consulta

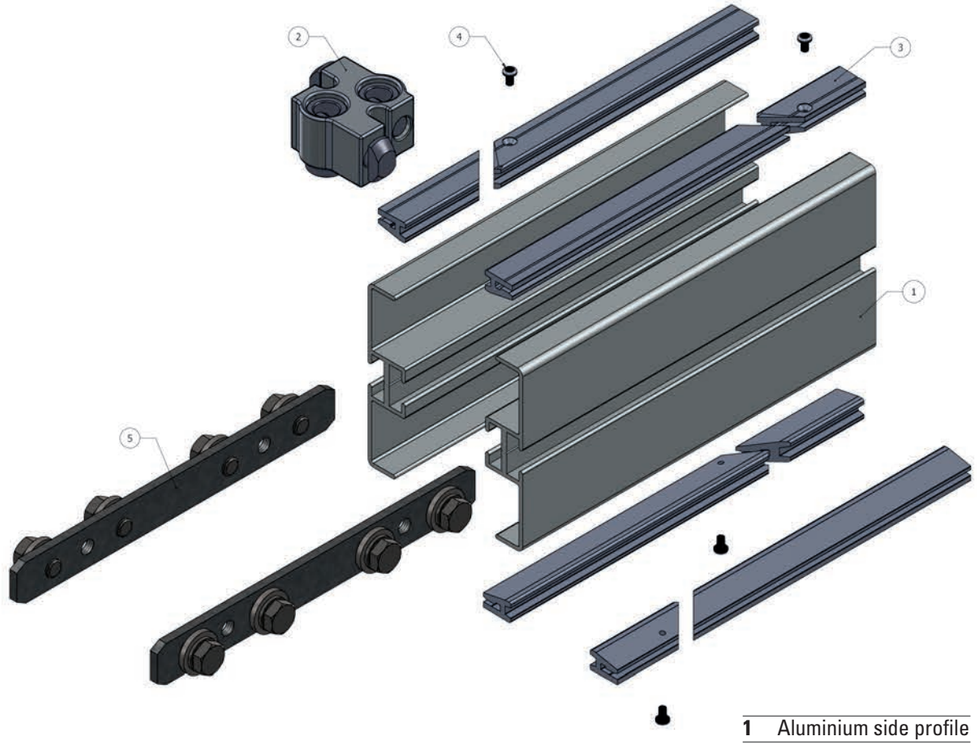

1	Aluminium side profile
2	Straight connector
3	Slide profile
4	Rokut rivets
5	Profile connector set

Dimensions - Abmessungen - Dimensions - Dimensiones

Art Nr. Pos 1	Material	L =		
ETS04080500001	AL	5.6 Mtr	18.37 Foot	1 x L

Art Nr. Pos 2	Material	L =		
ETS040805010085	AL	5.6 Mtr	18.37 Foot	10

Art Nr. Pos 3	Material	L =		
ETP040801000000	TCP Black	5.6 Mtr	18.37 Foot	10 x L
ETP040801000002	TCS Grey	5.6 Mtr	18.37 Foot	10 x L

Art Nr. Pos 4	Material		
EMPT040705000005	Nylon 6.6	3,5X1,0-5,0; NYLON-66-BLACK	250

Art Nr. Pos 5	Material	
EMPT040705000006	Steel galvanized, Stahl verzinkt, Acier galvanisé, Acero galvanizado	1 set

Others on request, Andere auf Anfrage, Autres sur demande, Otros sobre consulta

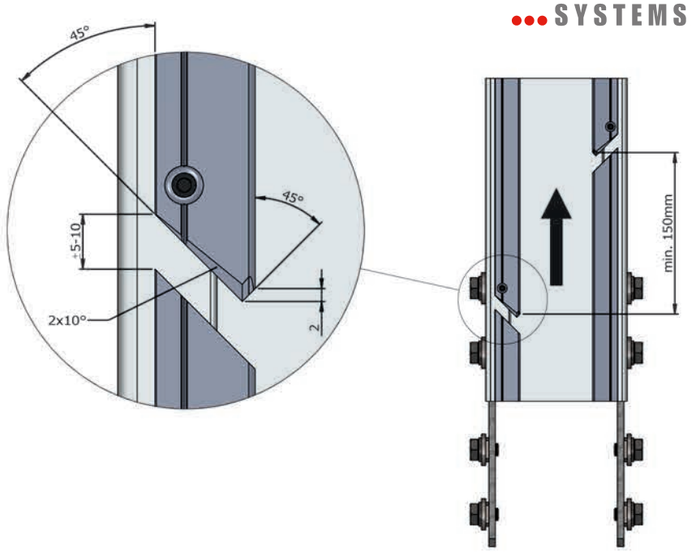

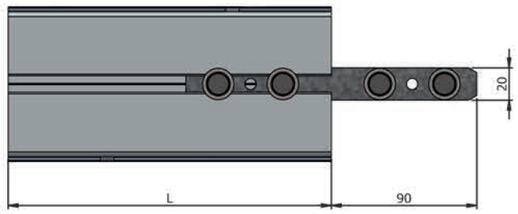

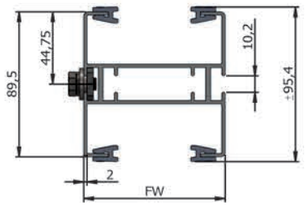

Dimensions - Abmessungen - Dimensions - Dimensiones

	FW =		L =	
ETS ALUMINIUM BEAM 80	87,5 mm	3,44" inch	5,6 mtr.	18.37 Foot

Others on request, Andere auf Anfrage,
Autres sur demande, Otros sobre consulta

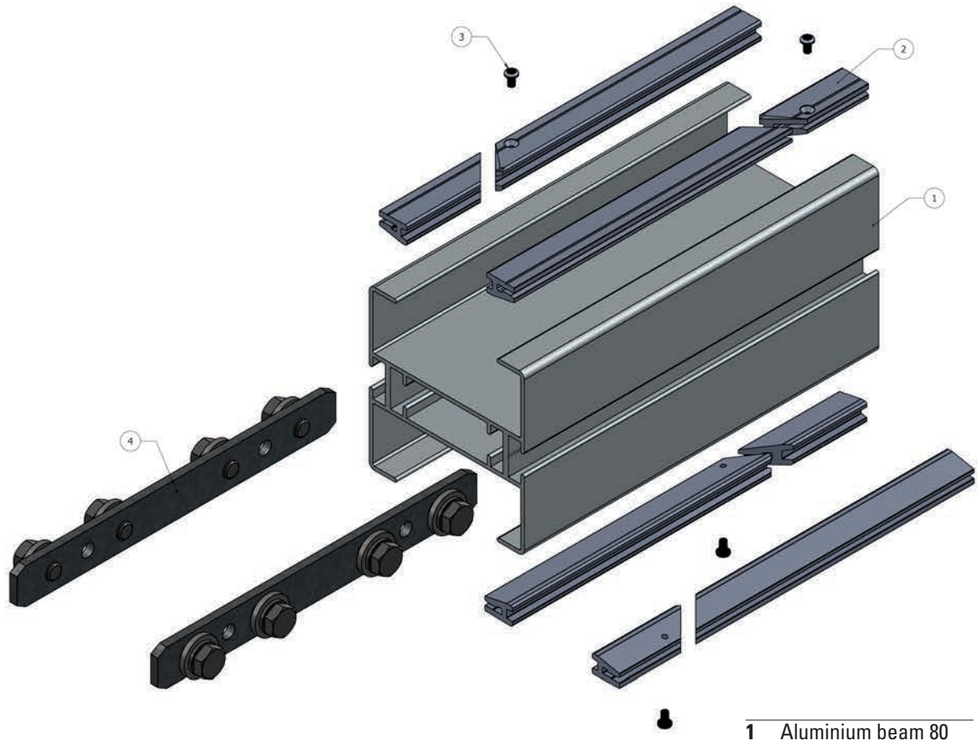

1	Aluminium beam 80
2	Slide profile
3	Rokut rivets
4	Profile connector set

Dimensions - Abmessungen - Dimensions - Dimensiones

Art Nr. Pos 1	Material	L =		
ETS04080500000	AL	5.6 Mtr	18.37 Foot	1 x L

Art Nr. Pos 2	Material	L =		
ETP040801000000	TCP Black	5.6 Mtr	18.37 Foot	10 x L
ETP040801000002	TCS Grey	5.6 Mtr	18.37 Foot	10 x L

Art Nr. Pos 3	Material		
EMPT040705000005	Nylon 6.6	3,5X1,0-5,0; NYLON-66-BLACK	250

Art Nr. Pos 4	Material	
EMPT040705000006	Steel galvanized, Stahl verzinkt, Acier galvanisé, Acero galvanizado	1 set

Others on request, Andere auf Anfrage, Autres sur demande, Otros sobre consulta

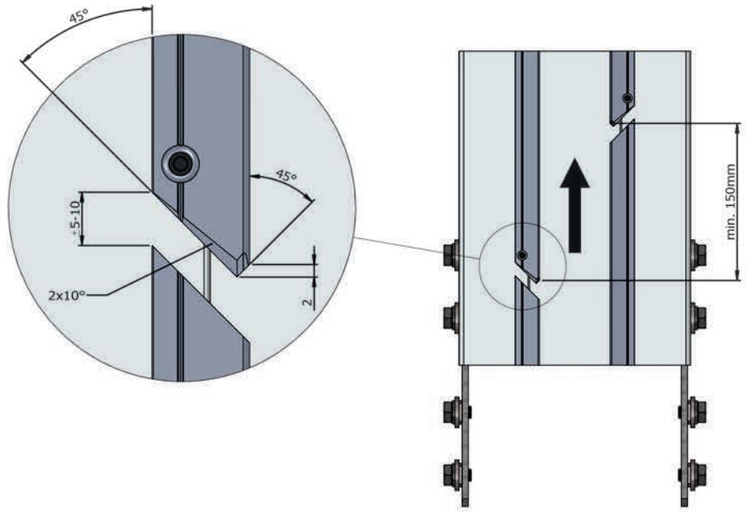

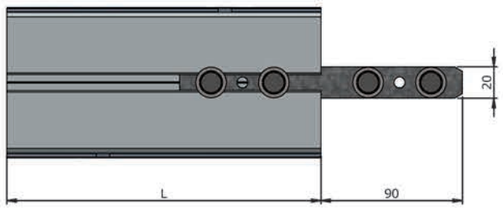

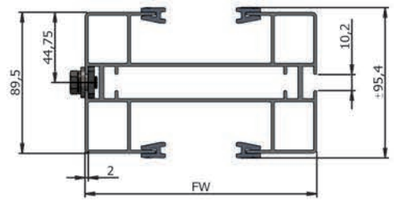

Dimensions - Abmessungen - Dimensions - Dimensiones

	FW =		L =	
ETS ALUMINIUM BEAM 140	147,5 mm	5,80" inch	5,6 mtr.	18,37 Foot

Others on request, Andere auf Anfrage,
Autres sur demande, Otros sobre consulta

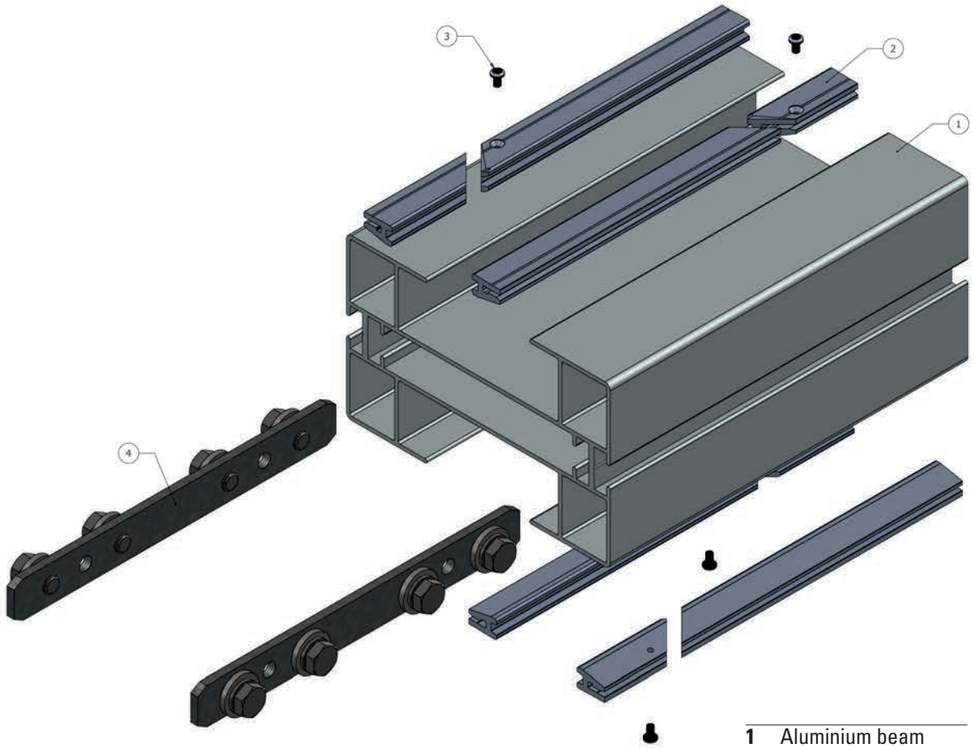

1	Aluminium beam
2	Slide profile
3	Rokut rivets
4	Profile connector set

Dimensions - Abmessungen - Dimensions - Dimensiones

Art Nr. Pos 1	Material	
ETS040805010000	AL	1 x L = 5,6 mtr

Art Nr. Pos 2	Material	L =		
ETP040801000000	TCP Black	5.6 Mtr	18.37 Foot	10 x L
ETP040801000002	TCS Grey	6 Mtr	19.68 Foot	10 x L

Art Nr. Pos 3	Material		
EMPT040705000005	Nylon 6.6	3,5X1,0-5,0; NYLON-66-BLACK	250

Art Nr. Pos 4	Material	
EMPT040705000004	Steel galvanized, Stahl verzinkt, Acier galvanisé, Acero galvanizado	1 set

Others on request, Andere auf Anfrage, Autres sur demande, Otros sobre consulta

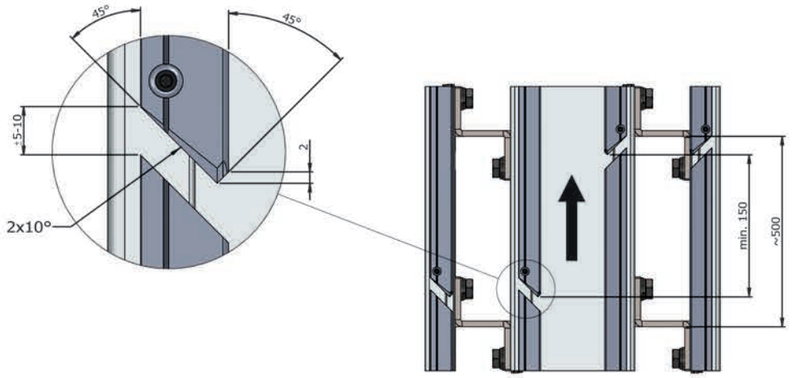

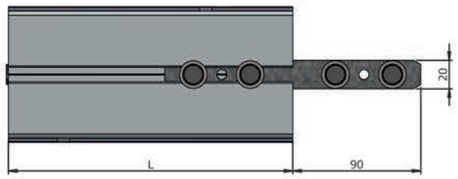

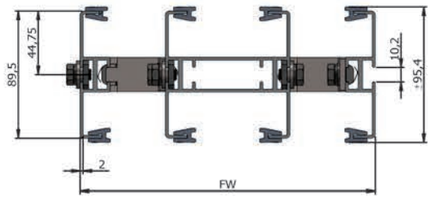

Dimensions - Abmessungen - Dimensions - Dimensiones

	FW =		L =	
ETS ALUMINIUM 200	207,5 mm	8,17" inch	5,6 mtr.	18,37 Foot

Others on request, Andere auf Anfrage,
Autres sur demande, Otros sobre consulta

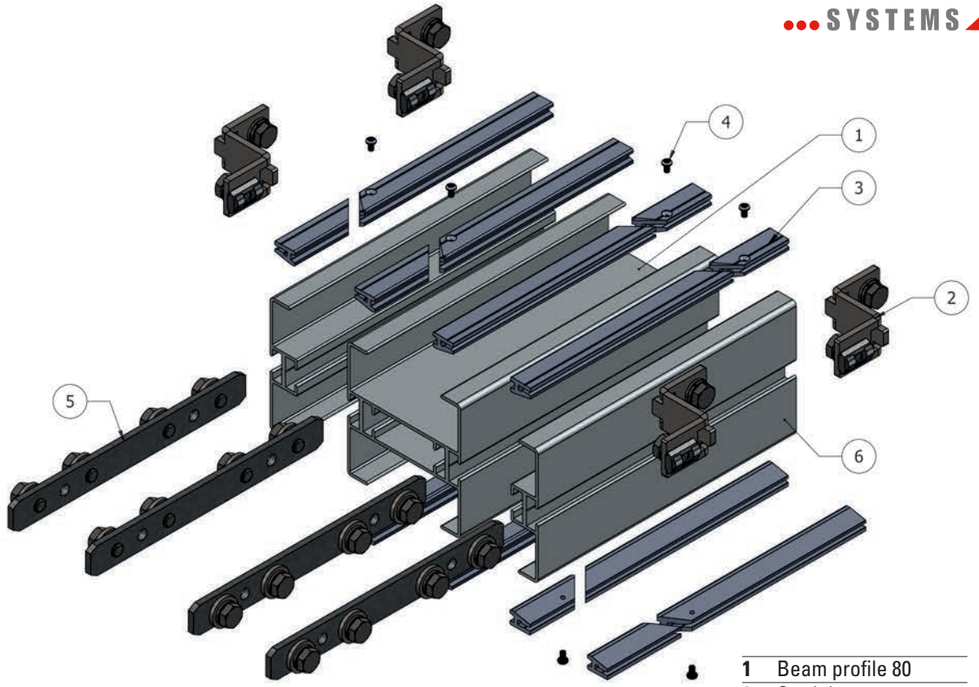

1	Beam profile 80
2	Straight connector
3	Slide profile
4	Rokut rivets
5	Profile connector set
6	Side profile

Dimensions - Abmessungen - Dimensions - Dimensiones

Art Nr. Pos 1	Material	
ETS040905000000	AL	1 x L = 5,6 mtr

Art Nr. Pos 2	Material	
ETS040805010200	Stainless steel, Edelstahl, Acier inoxydable, Acero inoxidable	10

Art Nr. Pos 3	Material	L =		
ETP040801000000	TCP Black	5.6 Mtr	18.37 Foot	10 x L
ETP040801000002	TCS Grey	6 Mtr	19.68 Foot	10 x L

Art Nr. Pos 4	Material		
EMPT040705000005	Nylon 6.6	3,5X1,0-5,0; NYLON-66-BLACK	250

Art Nr. Pos 5	Material	
EMPT040705000006	Steel galvanized, Stahl verzinkt, Acier galvanisé, Acero galvanizado	1 set
	For 200 wide, 2 sets needed	

Art Nr. Pos 6	Material	
ETS040805000001	AL	1 x L = 5,6 mtr

Others on request, Andere auf Anfrage, Autres sur demande, Otros sobre consulta

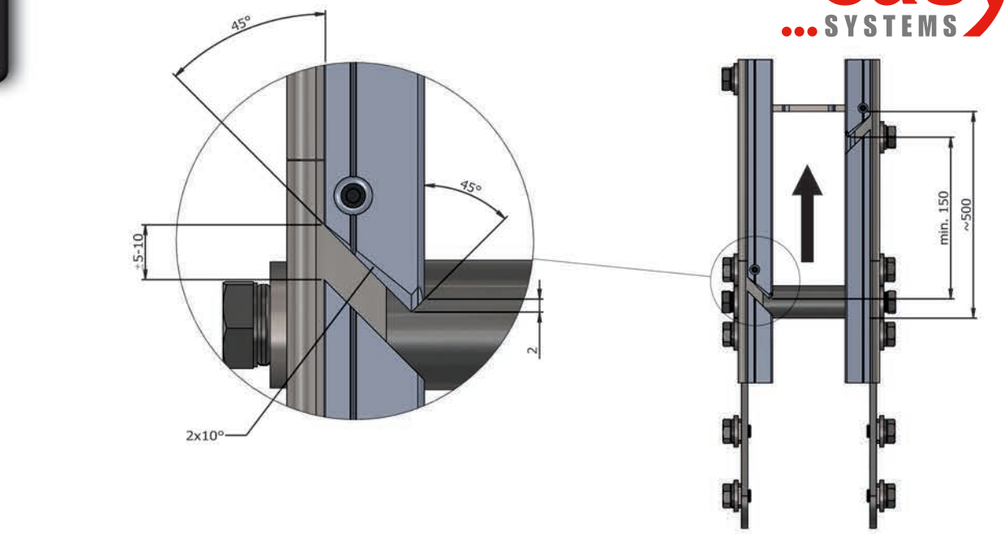

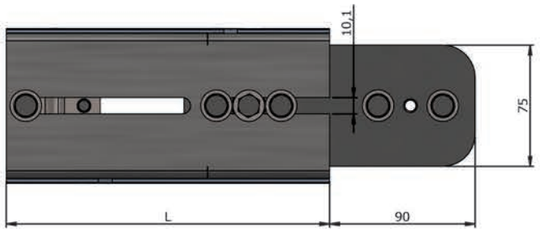

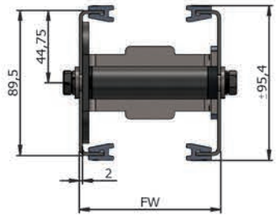

Dimensions - Abmessungen - Dimensions - Dimensiones

	FW =		L =	
ETS STAINLESS STEEL SIDE PROFILE 80	87,5 mm	3,44" inch	± 3 mtr.	± 9,8 Foot

Others on request, Andere auf Anfrage,
Autres sur demande, Otros sobre consulta

1	Side profile
2	Straight connector
3	Slide profile
4	Rokut rivets
5	Profile connector set

Dimensions - Abmessungen - Dimensions - Dimensiones

Art Nr. Pos 1	Material	
ETS040905000001	Stainless steel, Edelstahl, Acier inoxydable, Acero inoxidable	1 x L = ± 3 mtr

Art Nr. Pos 2 + 2a	Material	
ETS040905010085	Stainless steel, Edelstahl, Acier inoxydable, Acero inoxidable	10
ETS040905020085 (2a)	Stainless steel, Edelstahl, Acier inoxydable, Acero inoxidable	10

Art Nr. Pos 3	Material	L =		
ETP040801000000	TCP Black	5.6 Mtr	18.37 Foot	10 x L
ETP040801000002	TCS Grey	6 Mtr	19.68 Foot	10 x L

Art Nr. Pos 4	Material		
EMPT040705000005	Nylon 6.6	3,5X1,0-5,0; NYLON-66-BLACK	250

Art Nr. Pos 5	Material	
EMPT040705000004	Stainless steel, Edelstahl, Acier inoxydable, Acero inoxidable	1 set

Others on request, Andere auf Anfrage, Autres sur demande, Otros sobre consulta

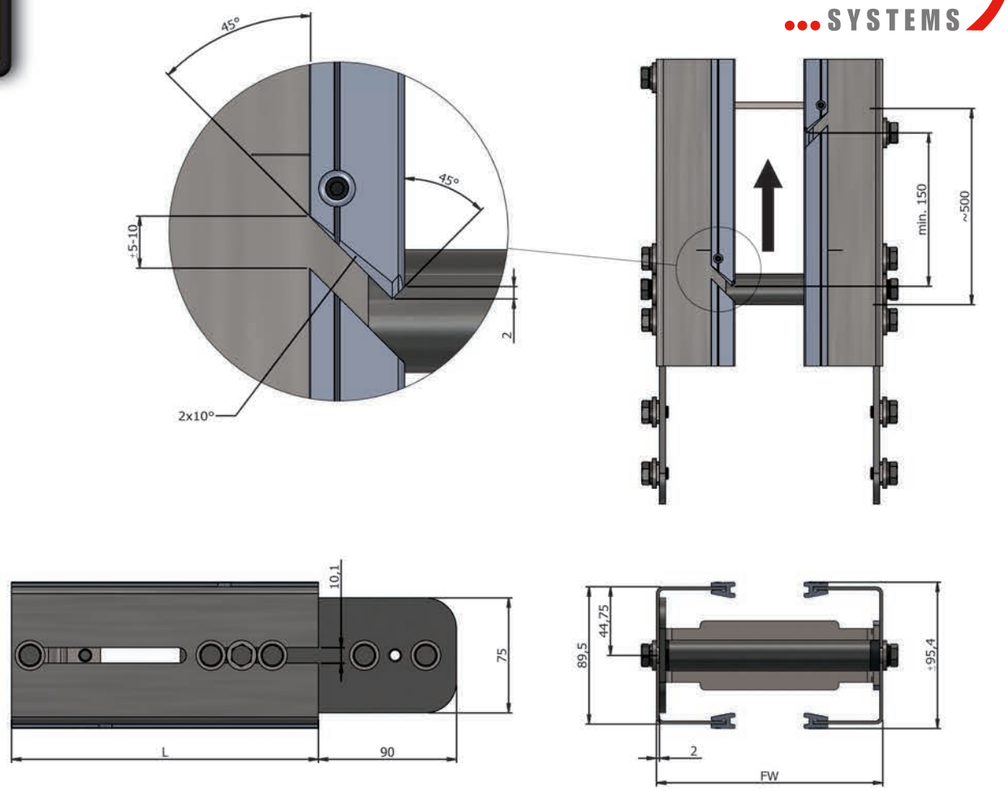

Dimensions - Abmessungen - Dimensions - Dimensiones

	FW =		L =	
ETS STAINLESS STEEL SIDE PROFILE 140	147,5 mm	5,80" inch	± 3 mtr.	± 9,8 Foot

Others on request, Andere auf Anfrage,
Autres sur demande, Otros sobre consulta

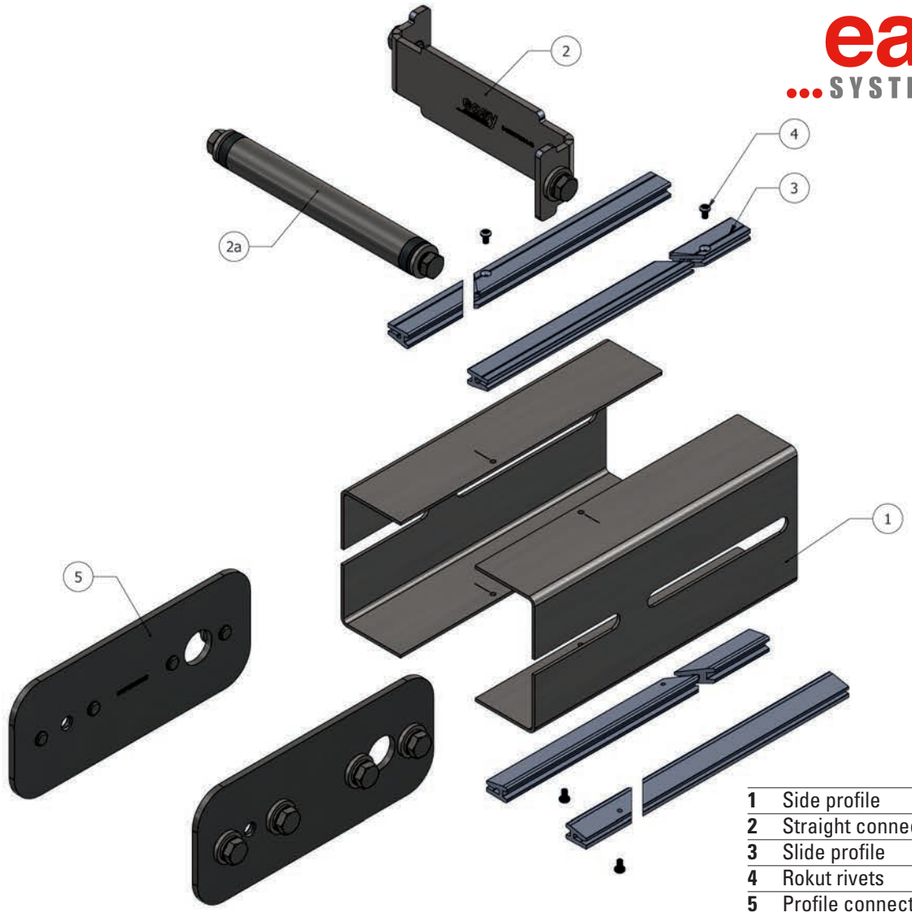

1	Side profile
2	Straight connector
3	Slide profile
4	Rokut rivets
5	Profile connector set

Dimensions - Abmessungen - Dimensions - Dimensiones

Art Nr. Pos 1	Material	
ETS040905010001	Stainless steel, Edelstahl, Acier inoxydable, Acero inoxidable	1 x L = ± 3 mtr

Art Nr. Pos 2 + 2a	Material	
ETS040905010140	Stainless steel, Edelstahl, Acier inoxydable, Acero inoxidable	10
ETS040905020140 (2a)	Stainless steel, Edelstahl, Acier inoxydable, Acero inoxidable	10

Art Nr. Pos 3	Material	L =		
ETP040801000000	TCP Black	5.6 Mtr	18.37 Foot	10 x L
ETP040801000002	TCS Grey	6 Mtr	19.68 Foot	10 x L

Art Nr. Pos 4	Material		
EMPT040705000005	Nylon 6.6	3,5X1,0-5,0; NYLON-66-BLACK	250

Art Nr. Pos 5	Material	
EMPT040705000004	Stainless steel, Edelstahl, Acier inoxydable, Acero inoxidable	1 set

Others on request, Andere auf Anfrage, Autres sur demande, Otros sobre consulta

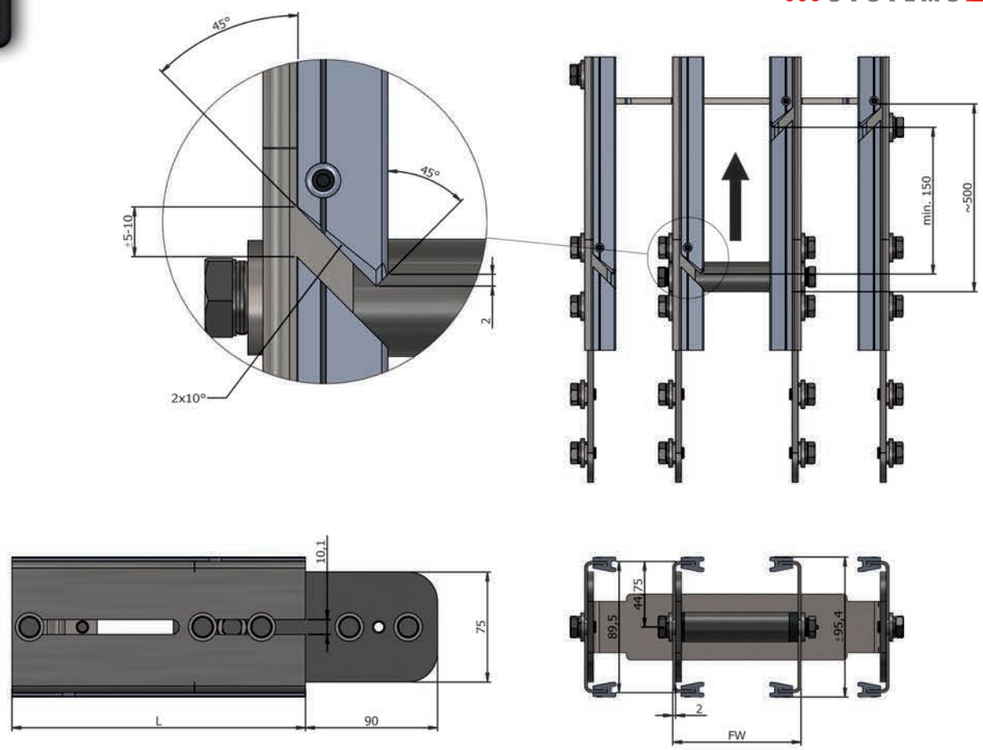

Dimensions - Abmessungen - Dimensions - Dimensiones

	FW =		L =	
ETS STAINLESS STEEL SIDE PROFILE 200	207,5 mm	8,17" inch	± 3 mtr.	± 9,8 Foot

Others on request, Andere auf Anfrage,
Autres sur demande, Otros sobre consulta

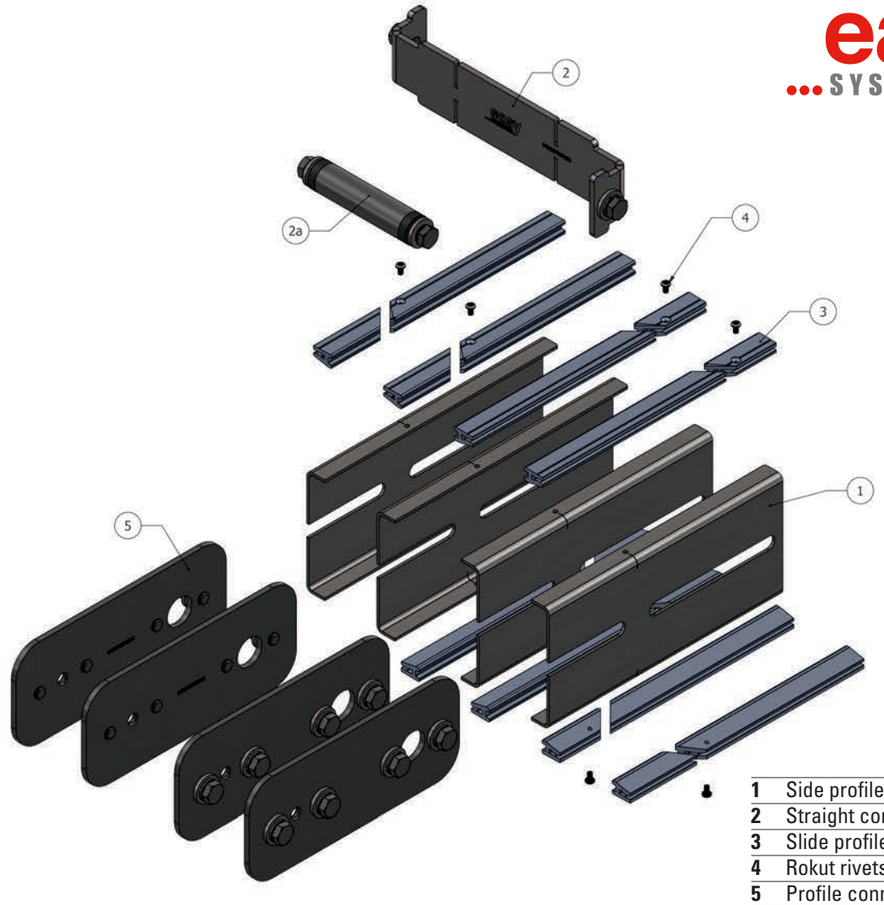

1	Side profile
2	Straight connector
3	Slide profile
4	Rokut rivets
5	Profile connector set

Dimensions - Abmessungen - Dimensions - Dimensiones

Art Nr. Pos 1	Material	
ETS040905000001	Stainless steel, Edelstahl, Acier inoxydable, Acero inoxidable	1 x L = ± 3 mtr

Art Nr. Pos 2 + 2a	Material	
ETS040905010085	Stainless steel, Edelstahl, Acier inoxydable, Acero inoxidable	10
ETS040905020200 (2a)	Stainless steel, Edelstahl, Acier inoxydable, Acero inoxidable	10

Art Nr. Pos 3	Material	L =		
ETP040801000000	TCP Black	5.6 Mtr	18.37 Foot	10 x L
ETP040801000002	TCS Grey	6 Mtr	19.68 Foot	10 x L

Art Nr. Pos 4	Material		
EMPT040705000005	Nylon 6.6	3,5X1,0-5,0; NYLON-66-BLACK	250

Art Nr. Pos 5	Material	
EMPT040705000004	Stainless steel, Edelstahl, Acier inoxydable, Acero inoxidable	1 set

Others on request, Andere auf Anfrage, Autres sur demande, Otros sobre consulta

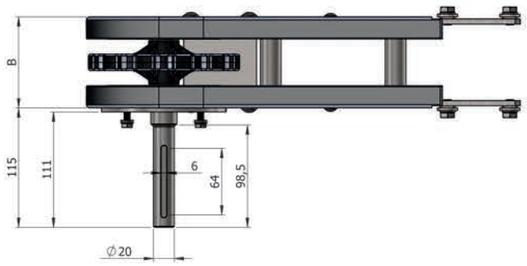

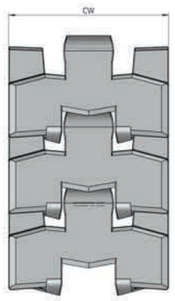

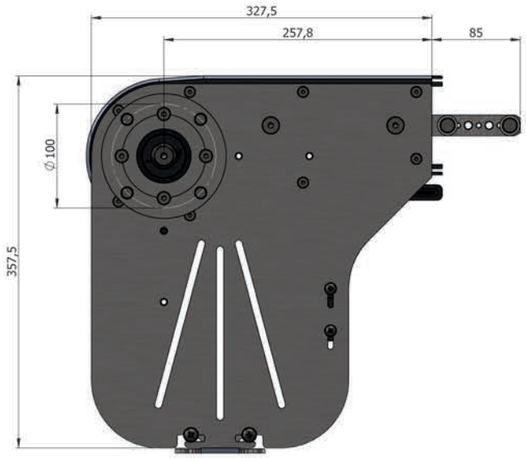

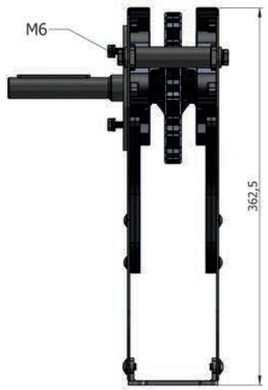

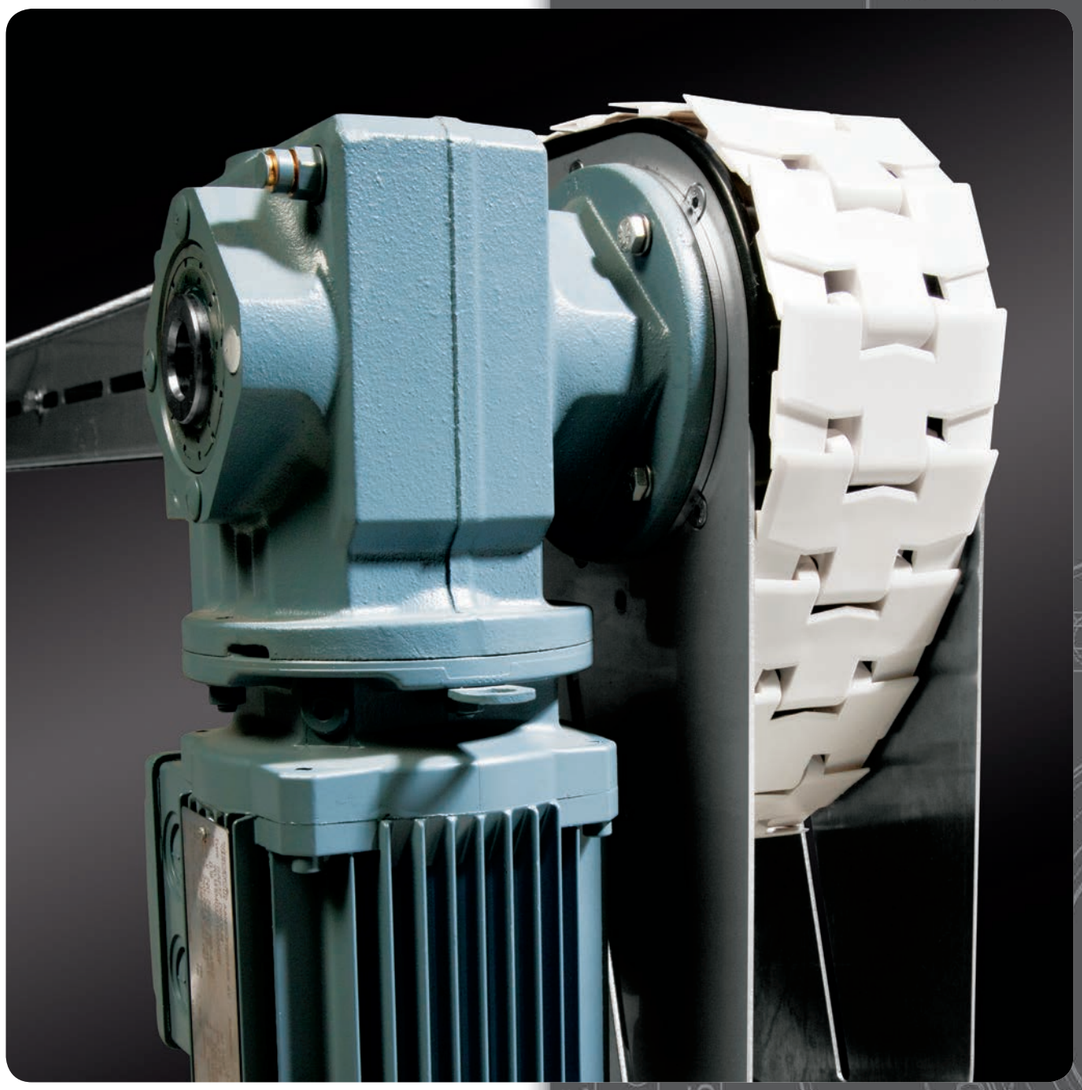

Dimensions - Abmessungen - Dimensions - Dimensiones

ALUMINIUM	STAINLESS STEEL	CW =		FW =		
ETS040801040000	ETS040901040000	80 mm	3,14" inch	87,5 mm	3,44" inch	1 set
ETS040801050000	ETS040901050000	140 mm	5,51" inch	147,5 mm	5,80" inch	1 set
ETS040801060000	ETS040901060000	200 mm	7,87" inch	207,5 mm	8,17" inch	1 set
Suitable for, Geeignet für, Convient pour, Adecuado para					SEW With flange 120	

Others on request, Andere auf Anfrage,
Autres sur demande, Otros sobre consulta

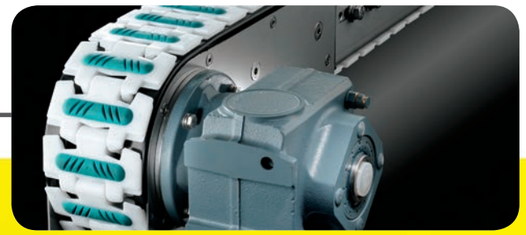

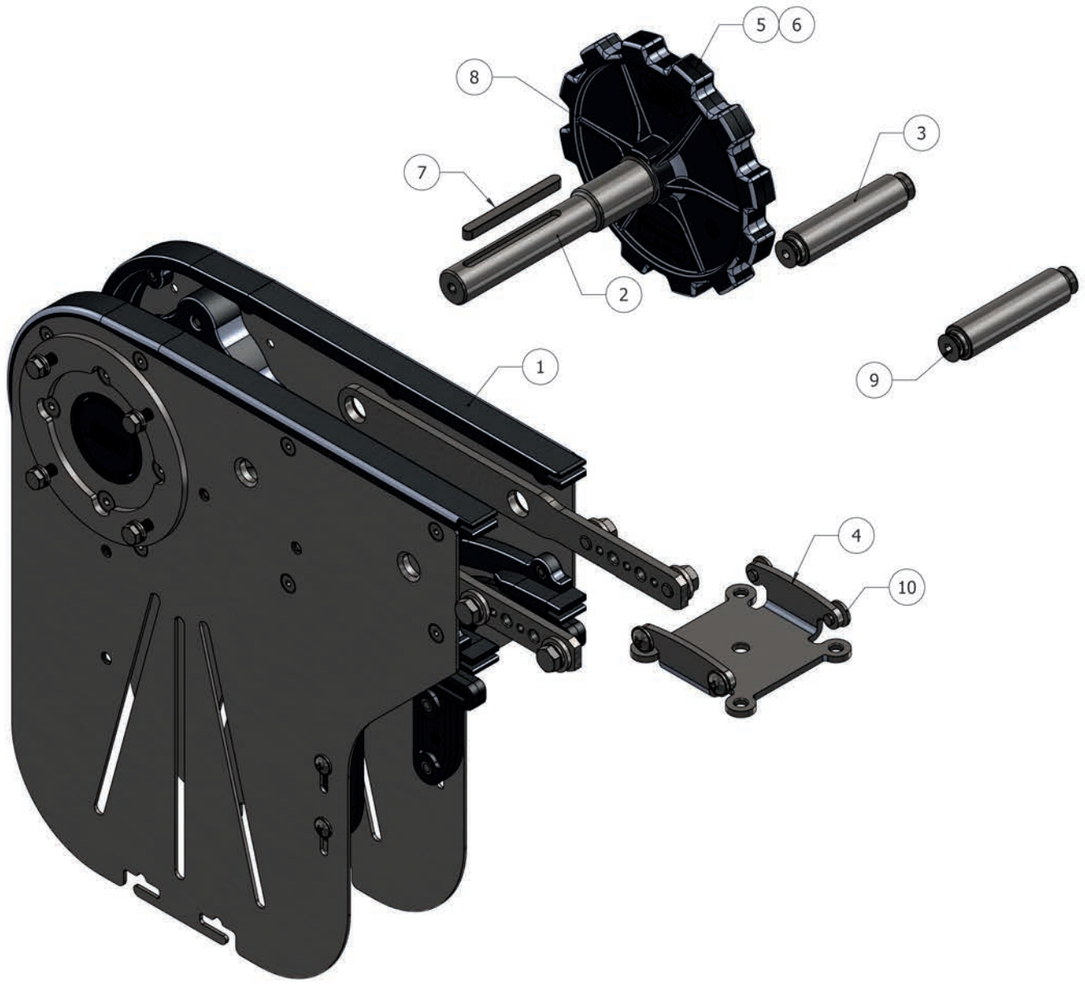

1	Head drive set
2	Drive shaft
3	Drive / return unit connector
4	Drive support plate
5	Chain wheel
6	Parallel key
7	Parallel key
8	Retaining ring
9	Hexagon socket countersunk head screw
10	Hexagon socket button head screw

Dimensions - Abmessungen - Dimensions - Dimensiones

Art Nr. Pos 1				
ETS040801010000		80 mm	3,14" inch	1
ETS040801020000		140 mm	5,51" inch	1
ETS040801030000		200 mm	7,87" inch	1
Material	AL			

Art Nr. Pos 1				
ETS040901010000		80 mm	3,14" inch	1
ETS040901020000		140 mm	5,51" inch	1
ETS040901030000		200 mm	7,87" inch	1
Material	Stainless steel, Edelstahl, Acier inoxydable, Acero inoxidable + PA 6.6			

Art Nr. Pos 2	Art Nr. Pos 3			
040901000085	040904000085	80 mm	3,14" inch	1
040901000140	040904000140	140 mm	5,51" inch	1
040901000200	040904000200	200 mm	7,87" inch	1
Material	Stainless steel, Edelstahl, Acier inoxydable, Acero inoxidable + PA 6.6			

Art Nr. Pos 4				
040905030085		80 mm	3,14" inch	1
040905030140		140 mm	5,51" inch	1
040905030200		200 mm	7,87" inch	1
Material	Stainless steel, Edelstahl, Acier inoxydable, Acero inoxidable + PA 6.6			

Art Nr. Pos 5			
040906000000	Pitch diameter Ø 147.2	Bore Ø 25 DIN 6885 key seat	1
Material	PA6		

Art Nr. Pos 6		Art Nr. Pos 7	
BV688587040A4	1	BV688566070A4	100
Material	Stainless steel, Edelstahl, Acier inoxydable, Acero inoxidable		

Art Nr. Pos 8	Material	
BV047125000A2	Stainless steel, Edelstahl, Acier inoxydable, Acero inoxidable	1

Art Nr. Pos 9	Material	
BV799108016A2	Stainless steel, Edelstahl, Acier inoxydable, Acero inoxidable	100

Art Nr. Pos 10	Material	
BV738006008A2	Stainless steel, Edelstahl, Acier inoxydable, Acero inoxidable	100

Others on request, Andere auf Anfrage, Autres sur demande, Otros sobre consulta

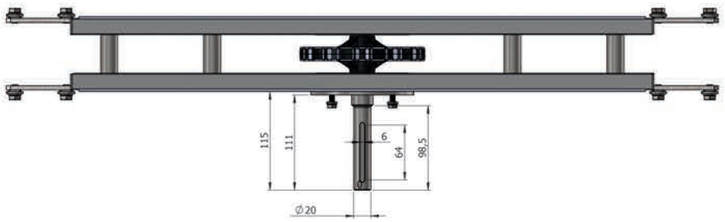

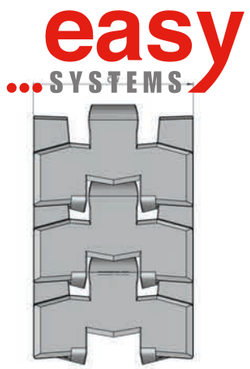

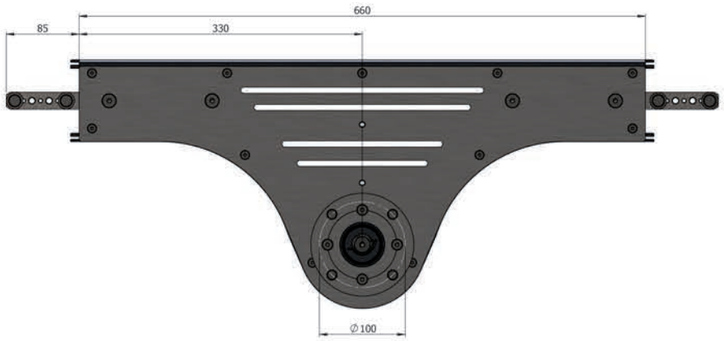

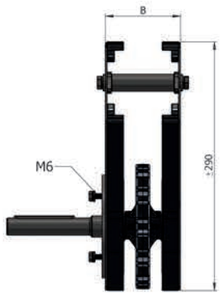

Dimensions - Abmessungen - Dimensions - Dimensiones

ALUMINIUM	STAINLESS STEEL	CW =		B =		
ETS040802040000	ETS040902040000	80 mm	3,14” inch	87,5 mm	3,44” inch	1 set
ETS040802050000	ETS040902050000	140 mm	5,51” inch	147,5 mm	5,80” inch	1 set
ETS040802060000	ETS040902060000	200 mm	7,87” inch	207,5 mm	8,17” inch	1 set
Suitable for, Geeignet für, Convient pour, Adecuado para					SEW With flange 120	

Others on request, Andere auf Anfrage,
Autres sur demande, Otros sobre consulta

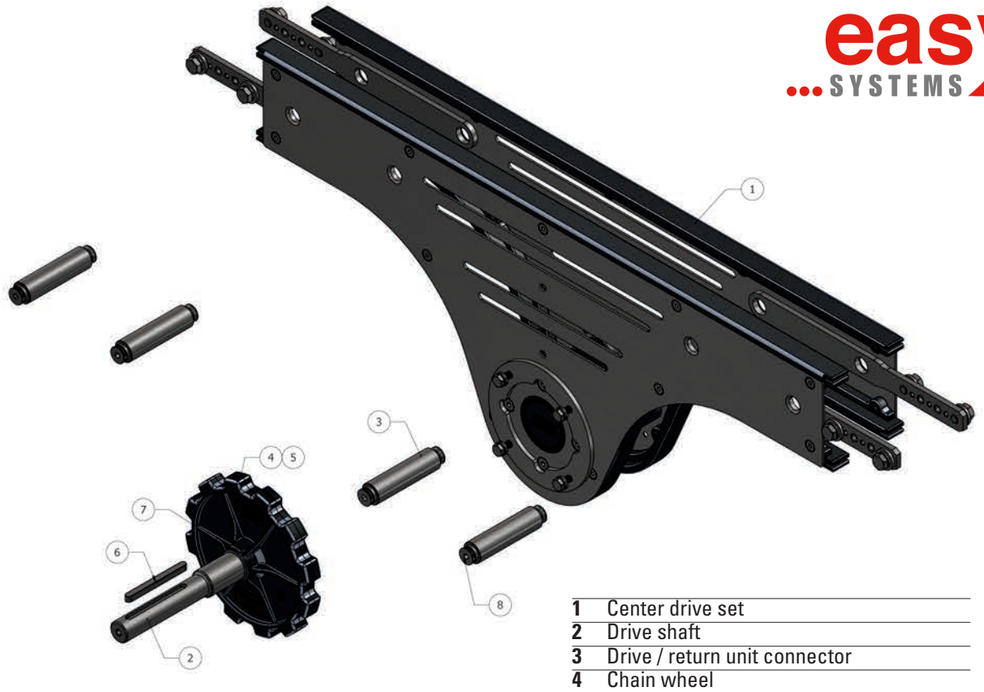

1	Center drive set
2	Drive shaft
3	Drive / return unit connector
4	Chain wheel
5+6	Parallel key
7	Retaining ring
8	Hexagon socket countersunk head screw

Dimensions - Abmessungen - Dimensions - Dimensiones

Art Nr. Pos 1				
Aluminium	**Stainless steel**			
ETS040802010000	ETS040902010000	80 mm	3,14” inch	1
ETS040802020000	ETS040902020000	140 mm	5,51” inch	1
ETS040802030000	ETS040902030000	200 mm	7,87” inch	1
Material	**Material**			
Aluminium	Stainless steel, Edelstahl, Acier inoxydable, Acero inoxidable + PA 6.6			

Art Nr. Pos 2	Art Nr. Pos 3			
040901000085	040904000085	80 mm	3,14” inch	1
040901000140	040904000140	140 mm	5,51” inch	1
040901000200	040904000200	200 mm	7,87” inch	1
Material	Stainless steel, Edelstahl, Acier inoxydable, Acero inoxidable + PA 6.6			

Art Nr. Pos 4				Material
040906000000	Pitch diameter Ø 147.2	Bore Ø 25 DIN 6885 key seat	1	PA6

Art Nr. Pos 5		Art Nr. Pos 6		Material
BV688587040A4	1	BV688566070A4	100	Stainless steel

Art Nr. Pos 7		Art Nr. Pos 8		Material
BV047125000A2	100	BV799108016A2	100	Stainless steel

Others on request, Andere auf Anfrage, Autres sur demande, Otros sobre consulta

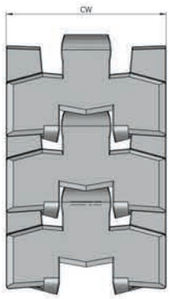

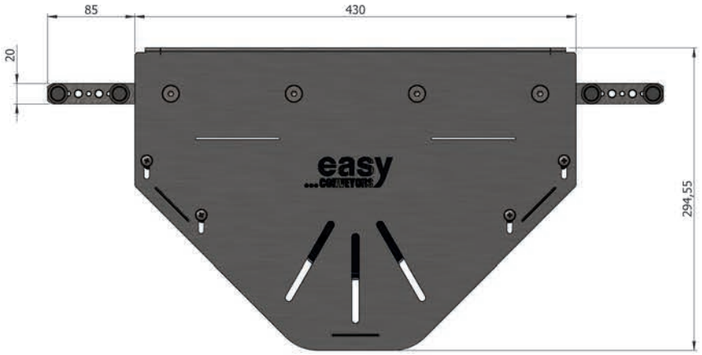

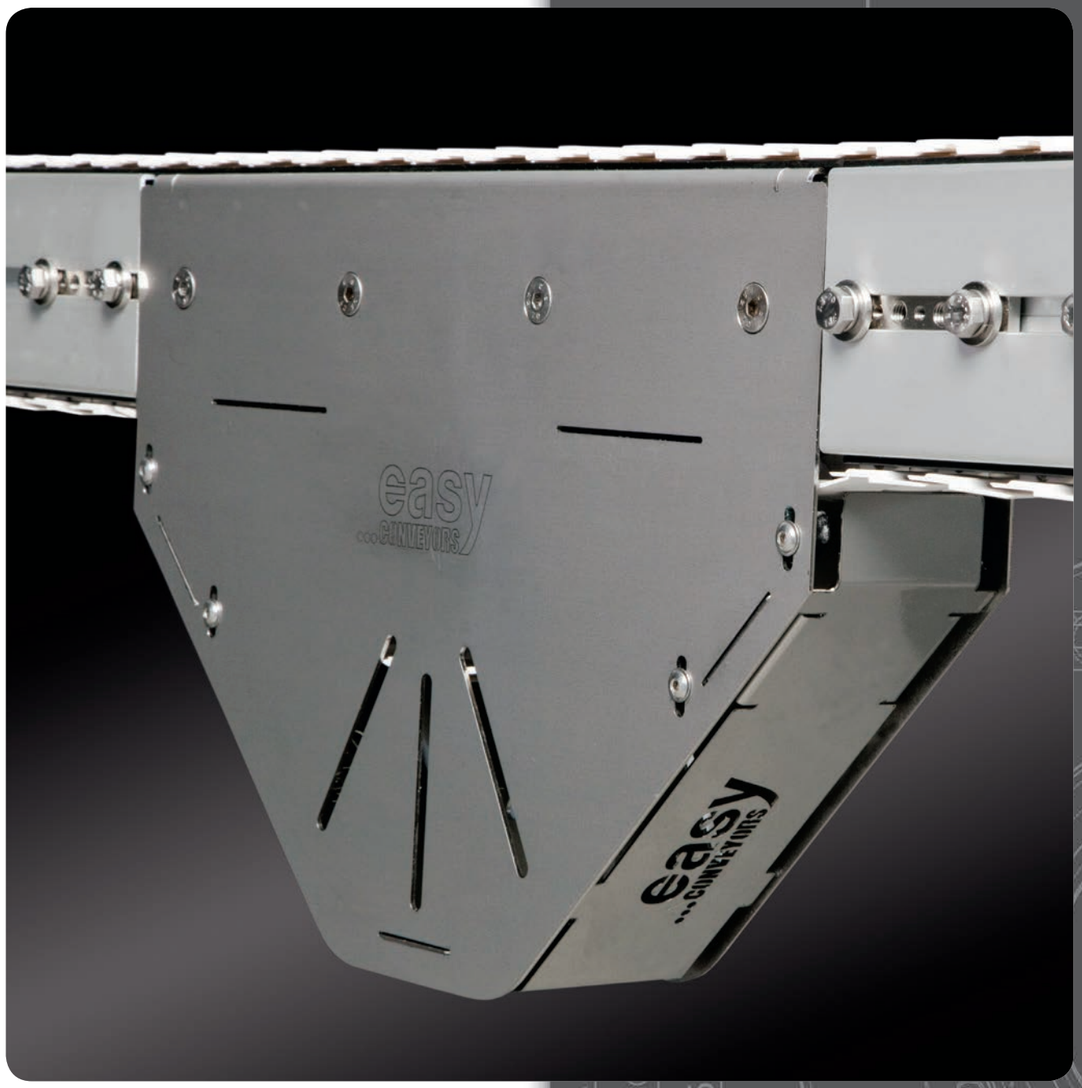

Dimensions - Abmessungen - Dimensions - Dimensiones

	B =		
ETS040905040000	87,5 mm	3,44" inch	1 set
ETS040905050000	147,5 mm	5,80" inch	1 set
ETS040905060000	207,5 mm	8,17" inch	1 set

Others on request, Andere auf Anfrage,
Autres sur demande, Otros sobre consulta

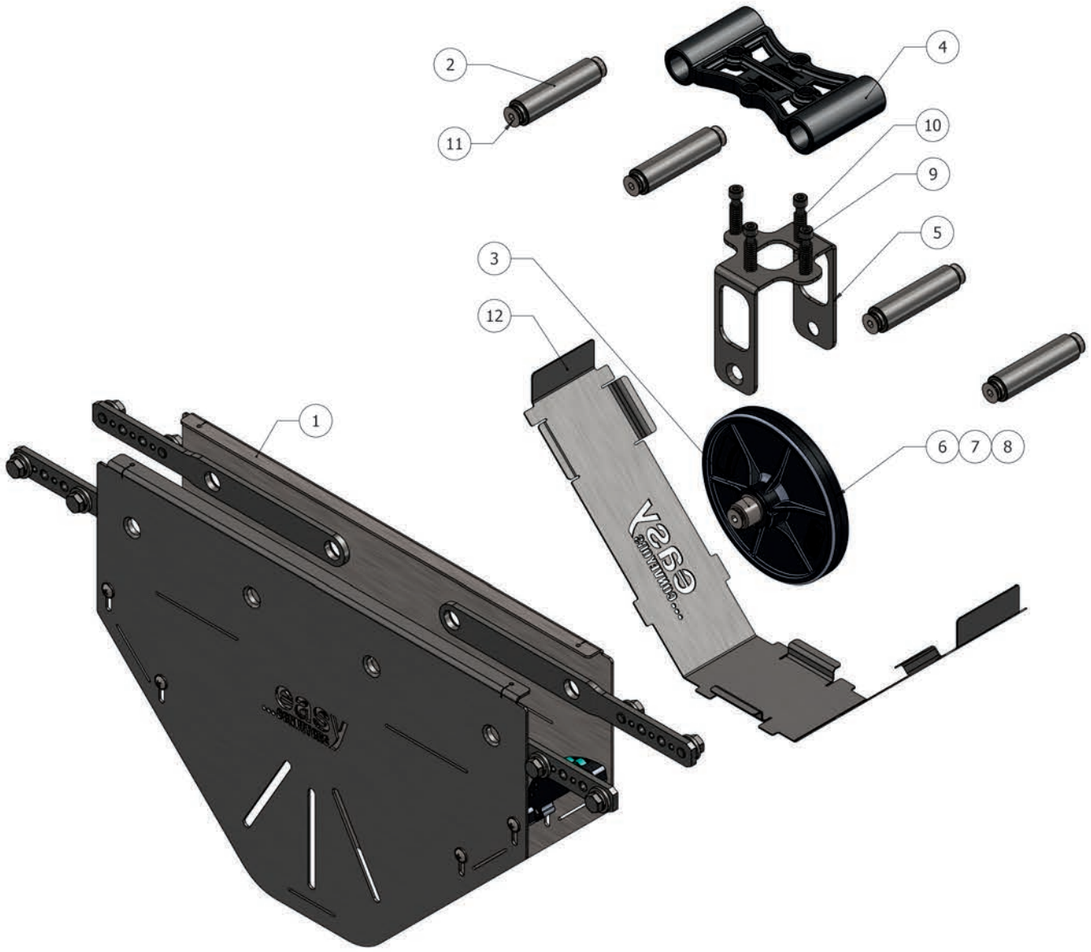

1	ETS / EMBS Sag module
2	SAG module connector
3	Tentioner shaft
4	Tentioner holder
5	Tentioner plate
6	ETS return wheel
7	Slide bearing
8	Retaining ring
9	Hexagon socket head cap
10	Pressure ring
11	Hexagon socket countersunk head screw
12	SAG module cover

Dimensions - Abmessungen - Dimensions - Dimensiones

Art Nr. Pos 1		
ETS040905030000	ETS SAG Module; general	1
Material	Stainless steel, Edelstahl, Acier inoxydable, Acero inoxidable + PA6.6	

Art Nr. Pos 2		
040904000085	ETS DRIVE/RETURN UNIT CONNECTOR; 80	1
040904000140	ETS DRIVE/RETURN UNIT CONNECTOR; 140	1
040904020200	SAG MODULE CONNECTOR; 200	1
Material	Stainless steel, Edelstahl, Acier inoxydable, Acero inoxidable	

Art Nr. Pos 3		
040909000001	TENTIONER SHAFT	1
Material	Stainless steel, Edelstahl, Acier inoxydable, Acero inoxidable	

Art Nr. Pos 4		
040906000015	TENTIONER HOLDER	1
Material	POM	

Art Nr. Pos 5		
040905000012	TENTIONER PLATE	1
Material	Stainless steel, Edelstahl, Acier inoxydable, Acero inoxidable	

Art Nr. Pos 6			
040906000001	Diameter Ø133.1	Bore Ø25 DIN 6885 key seat	1
Material	PA6		

Art Nr. Pos 7		
040909000000	SLIDE BEARING; Ø20x15	1
Material	PA6	

Art Nr. Pos 8	**Art Nr. Pos 9**	
BV047120000A2	BV091206040A2	100
Material	Stainless steel, Edelstahl, Acier inoxydable, Acero inoxidable	

Art Nr. Pos 10	**Art Nr. Pos 11**	
040909020000	BV799108016A2	100
Material	Stainless steel, Edelstahl, Acier inoxydable, Acero inoxidable	

Art Nr. Pos 12		
040905042085	ETS SAG MODULE COVER; 80	1
040905042140	ETS SAG MODULE COVER; 140	1
040905042200	ETS SAG MODULE COVER; 200	1
Material	Stainless steel, Edelstahl, Acier inoxydable, Acero inoxidable	

Others on request, Andere auf Anfrage, Autres sur demande, Otros sobre consulta

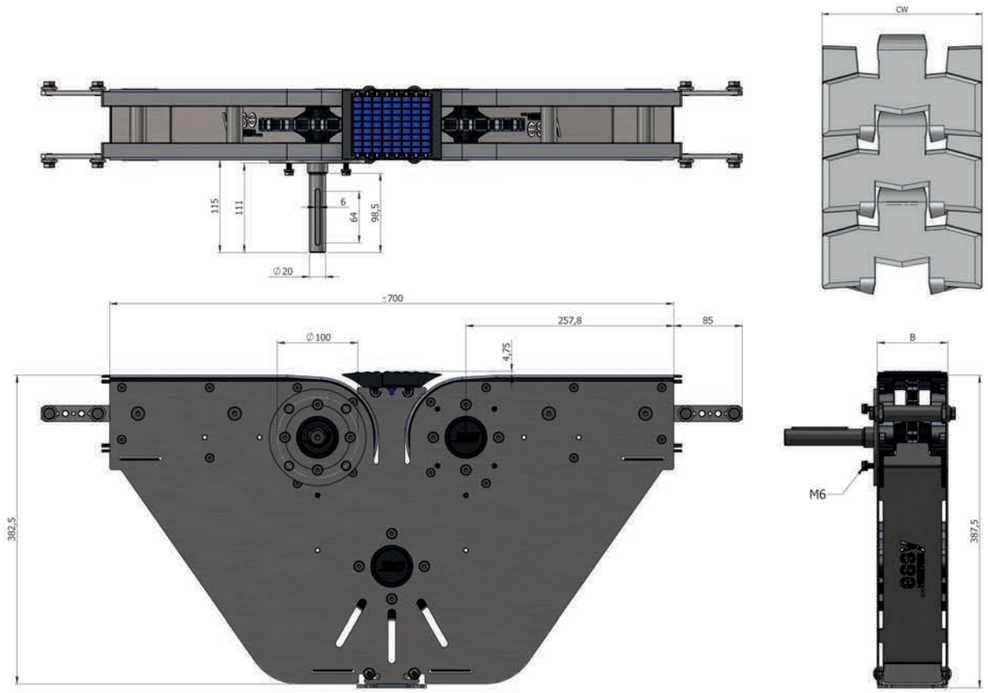

Dimensions - Abmessungen - Dimensions - Dimensiones

ALUMINIUM	STAINLESS STEEL	CW =		B =		
ETS040803040000	ETS040903040000	80 mm	3,14" inch	87,5 mm	3,44" inch	1 set
ETS040803050000	ETS040903050000	140 mm	5,51" inch	147,5 mm	5,80" inch	1 set
ETS040803060000	ETS040903060000	200 mm	7,87" inch	207,5 mm	8,17" inch	1 set
Suitable for, Geeignet für, Convient pour, Adecuado para					SEW With flange 120	

Others on request, Andere auf Anfrage,
Autres sur demande, Otros sobre consulta

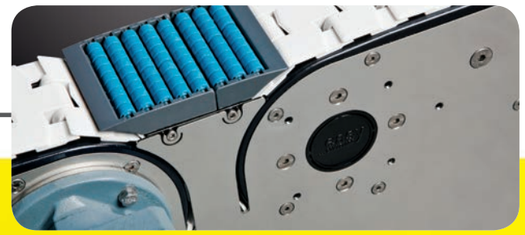

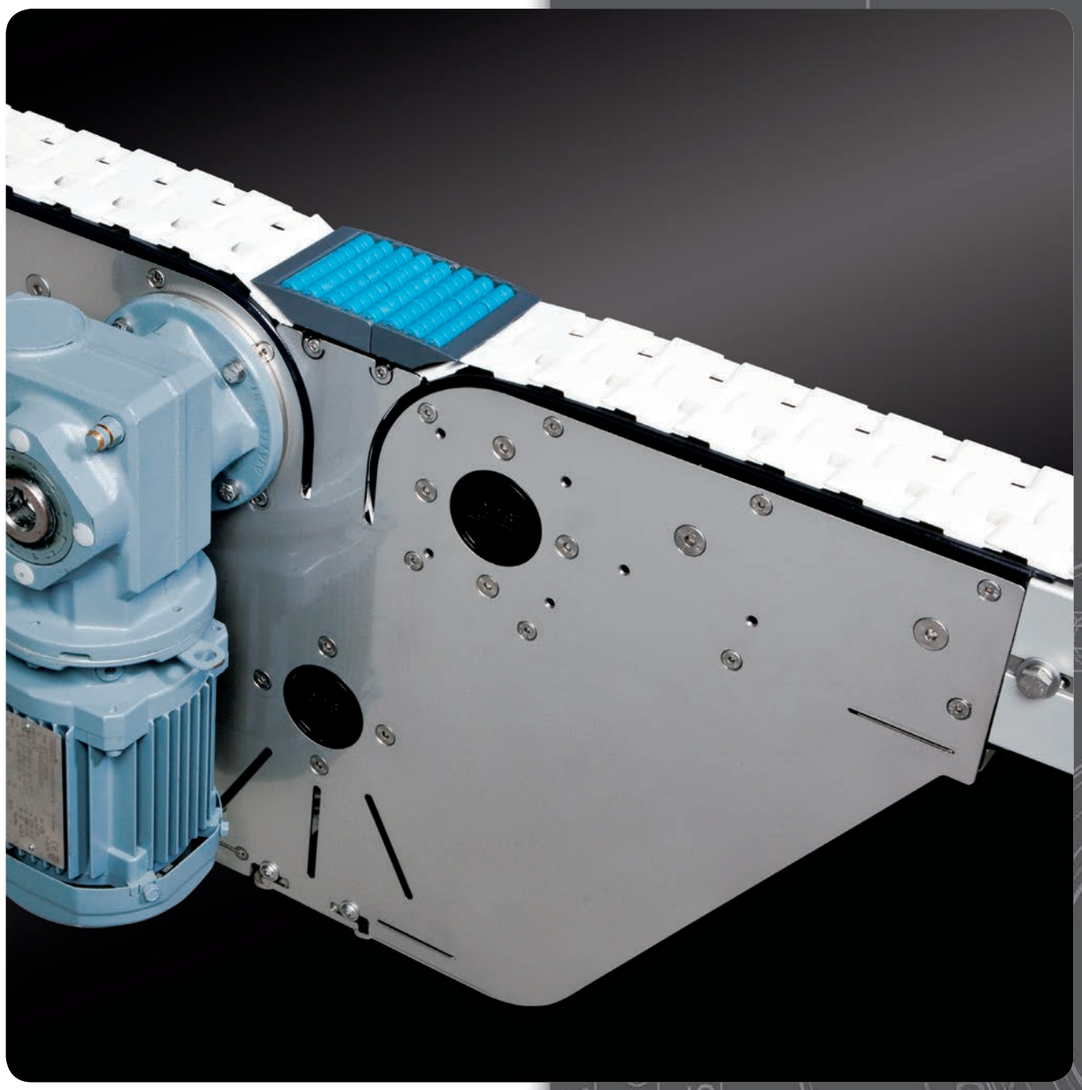

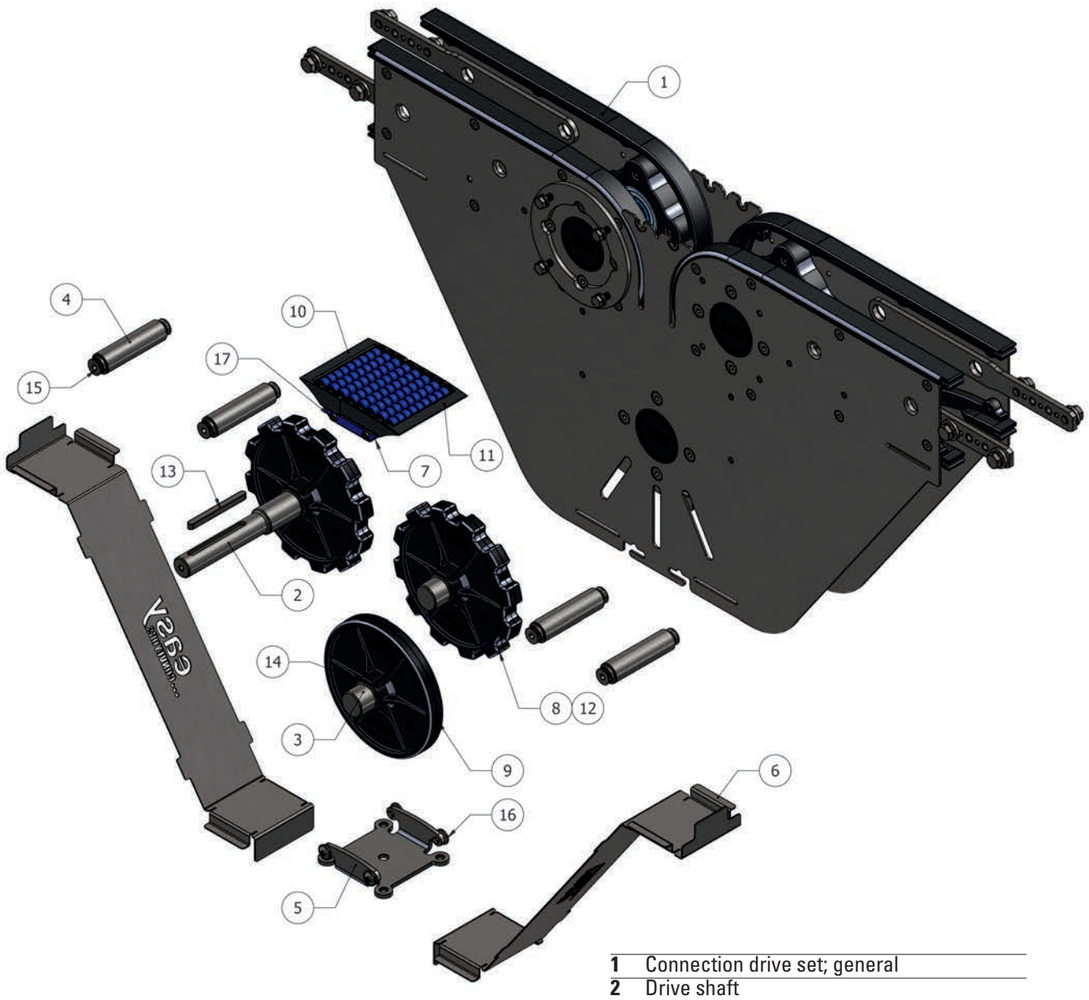

1	Connection drive set; general
2	Drive shaft
3	Return shaft
4	Drive / return unit connector
5	Drive support plate
6	Connection drive cover
7	Transfer plate
8	Chain wheel
9	Return wheel
10	Modular transfer plate with rollers
11	Modular transfer plate with rollers
12	Parallel key
13	Parallel key
14	Retaining ring
15	Hexagon socket countersunk head screw
16	Hexagon socket button head screw

Dimensions - Abmessungen - Dimensions - Dimensiones

Art Nr. Pos 1				
ETS040803010000	ETS040903010000	80 mm	3,14” inch	1
ETS040803020000	ETS040903020000	140 mm	5,51” inch	1
ETS040803030000	ETS040903030000	200 mm	7,87” inch	1
Material	**Material**			
Aluminium	Stainless steel, Edelstahl, Acier inoxydable, Acero inoxidable + PA 6.6			

Art Nr. Pos 2	Art Nr. Pos 3	Art Nr. Pos 4			
040901000085	040903000085	040904000085	80 mm	3,14” inch	1
040901000140	040903000140	040904000140	140 mm	5,51” inch	1
040901000200	040903000200	040904000200	200 mm	7,87” inch	1
Material	Stainless steel, Edelstahl, Acier inoxydable, Acero inoxidable + PA 6.6				

Art Nr. Pos 5	Art Nr. Pos 6	Art Nr. Pos 7			
040905030085	040906080085	040906000011	80 mm	3,14” inch	1
040905030140	040906080140	040906060140	140 mm	5,51” inch	1
040905031200	040906080200	040906060200	200 mm	7,87” inch	1
Material	Stainless steel, Edelstahl, Acier inoxydable, Acero inoxidable + Pos 7: POM				

Art Nr. Pos 8			Material	
040906000000	Pitch diameter Ø 147.2	Bore Ø 25 DIN 6885 key seat	PA6	1

Art Nr. Pos 9			Material	
040906000001	Diameter Ø 133.1	Bore Ø 25 DIN 6885 key seat	PA6	1
Material	PA6			

Art Nr. Pos 10	Art Nr. Pos 11	W=	Material	
040709010002	040909010000	85	Stainless Steel, PBT, POM	1
040709010003	040909030000	115	Stainless Steel, PBT, POM	1

Art Nr. Pos 12		Art Nr. Pos 13	
BV688587040A4	1	BV688566070A4	100
Material	Stainless steel, Edelstahl, Acier inoxydable, Acero inoxidable		

Art Nr. Pos 14	Material	
BV047125000A2	Stainless steel, Edelstahl, Acier inoxydable, Acero inoxidable	1

Art Nr. Pos 15	Material	
BV799108016A2	Stainless steel, Edelstahl, Acier inoxydable, Acero inoxidable	100

Art Nr. Pos 16	Material	
BV738006008A2	Stainless steel, Edelstahl, Acier inoxydable, Acero inoxidable	100

Others on request, Andere auf Anfrage, Autres sur demande, Otros sobre consulta

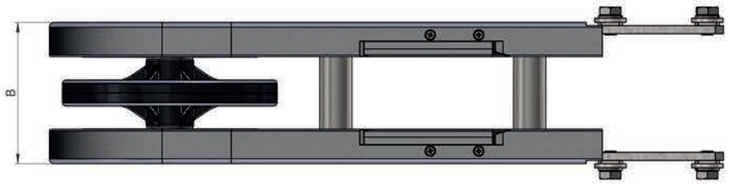

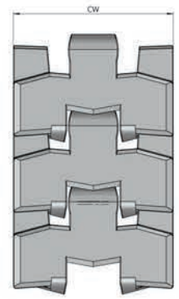

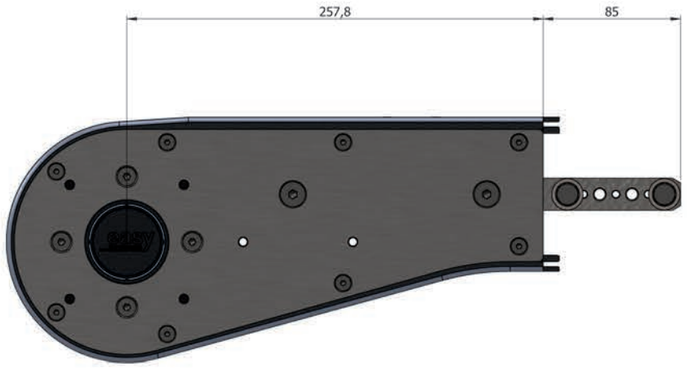

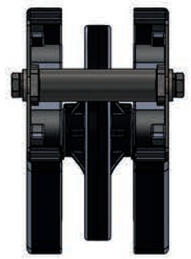

Dimensions - Abmessungen - Dimensions - Dimensiones

ALUMINIUM	STAINLESS STEEL	CW =		B =		
ETS040804040000	ETS040904040000	80 mm	3,14” inch	87,5 mm	3,44” inch	1 set
ETS040804050000	ETS040904050000	140 mm	5,51” inch	147,5 mm	5,80” inch	1 set
ETS040804060000	ETS040904060000	200 mm	7,87” inch	207,5 mm	8,17” inch	1 set
Suitable for, Geeignet für, Convient pour, Adecuado para					SEW With flange 120	

Others on request, Andere auf Anfrage,
Autres sur demande, Otros sobre consulta

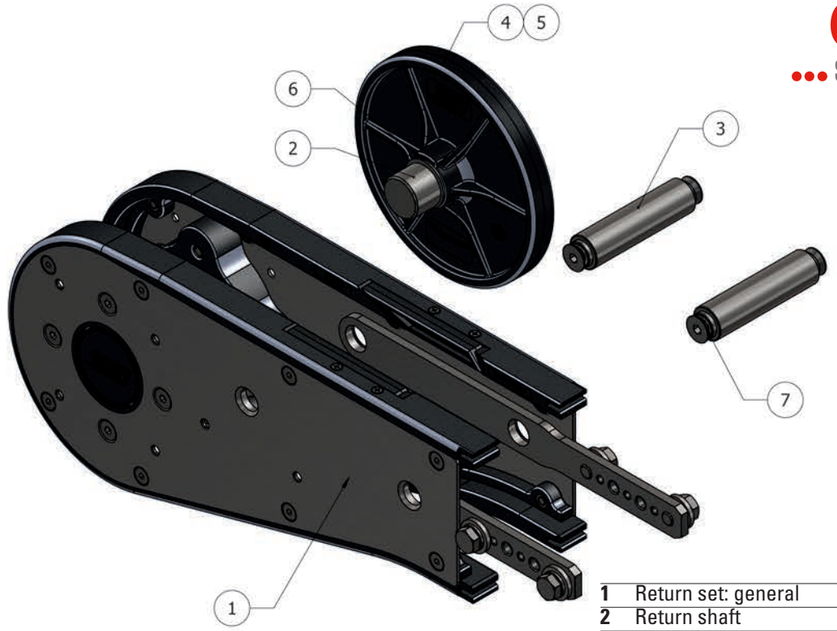

1	Return set: general
2	Return shaft
3	Drive / return unit connector
4	Return wheel
5	Parallel key
6	Retaining ring
7	Hexagon socket countersunk head screw

Dimensions - Abmessungen - Dimensions - Dimensiones

Art Nr. Pos 1				
Aluminium	**Stainless steel**			
ETS040804010000	ETS040904010000	80 mm	3,14” inch	1
ETS040804020000	ETS040904020000	140 mm	5,51” inch	1
ETS040804030000	ETS040904030000	200 mm	7,87” inch	1
Material	**Material**			
Aluminium	Stainless steel, Edelstahl, Acier inoxydable, Acero inoxidable + PA 6.6			

Art Nr. Pos 2	Art Nr. Pos 3			
040903000085	040904000085	80 mm	3,14” inch	1
040903000140	040904000140	140 mm	5,51” inch	1
040903000200	040904000200	200 mm	7,87” inch	1
Material	Stainless steel, Edelstahl, Acier inoxydable, Acero inoxidable + PA 6.6			

Art Nr. Pos 4				Material
040906000001	Diameter Ø 133.1	Bore Ø 25 DIN 6885 key seat	1	PA6

Art Nr. Pos 5		Art Nr. Pos 6		Material
BV688587040A4	1	BV047125000	100	Stainless steel

Art Nr. Pos 7		Material
BV799108016A2	100	Stainless steel

Others on request, Andere auf Anfrage, Autres sur demande, Otros sobre consulta

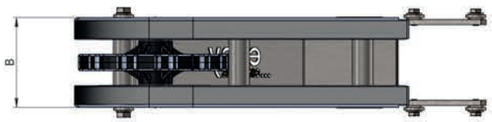

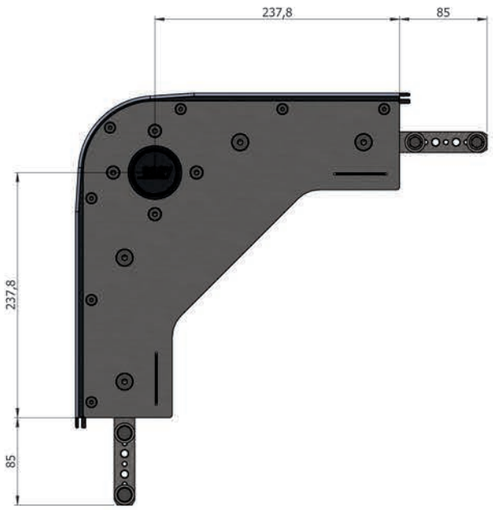

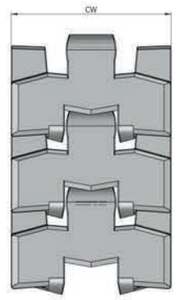

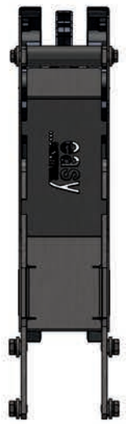

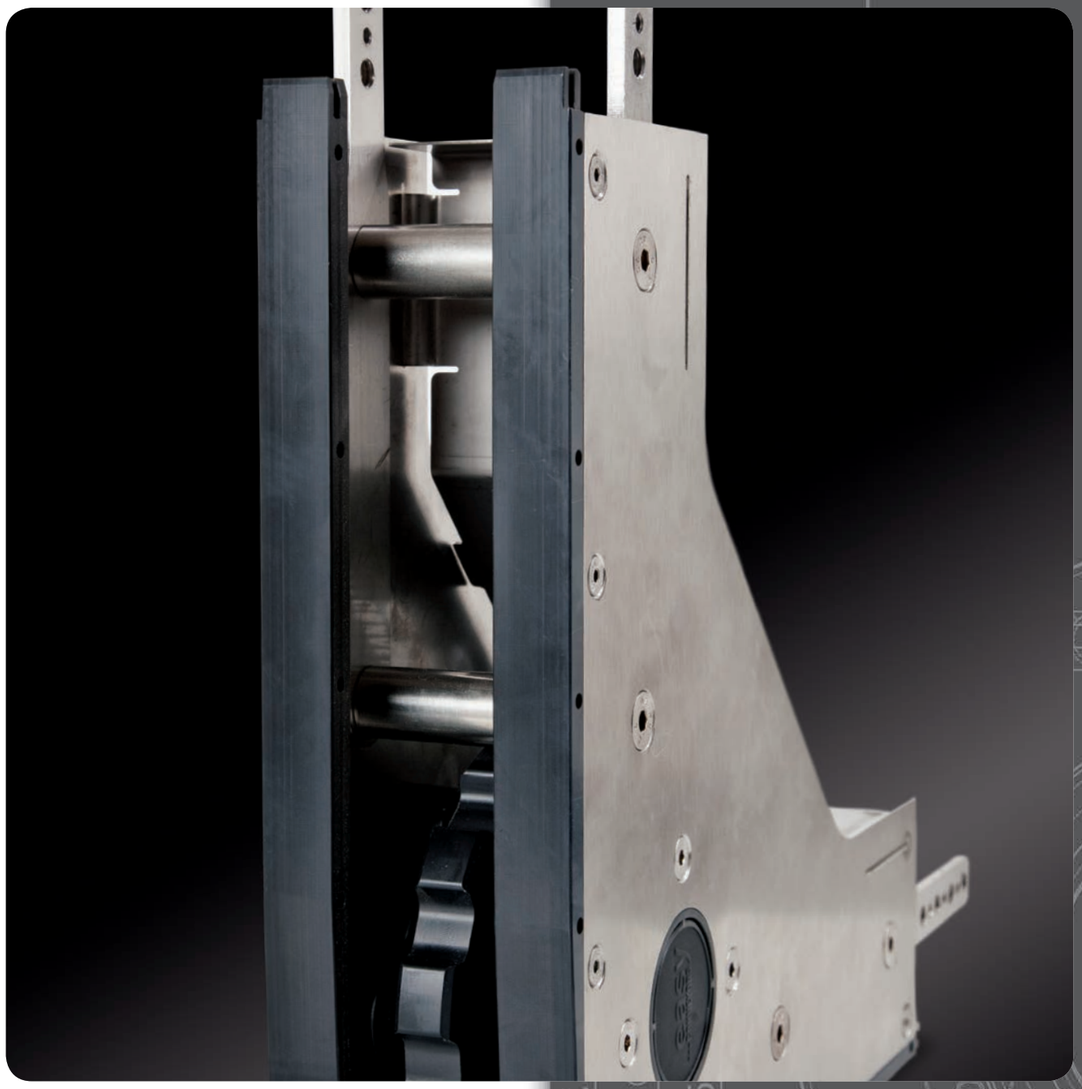

Dimensions - Abmessungen - Dimensions - Dimensiones

ALUMINIUM	STAINLESS STEEL	FW =		
ETS040807071085	ETS040907071085	87,5 mm	3,44" inch	1
ETS040807071140	ETS040907071140	147,5 mm	5,80" inch	1
ETS040807071200	ETS040907071200	207,5 mm	8,17" inch	1
Material	**Material**			
Aluminium	Stainless steel, Edelstahl, Acier inoxydable, Acero inoxidable + PA 6.6			

Others on request, Andere auf Anfrage,
Autres sur demande, Otros sobre consulta

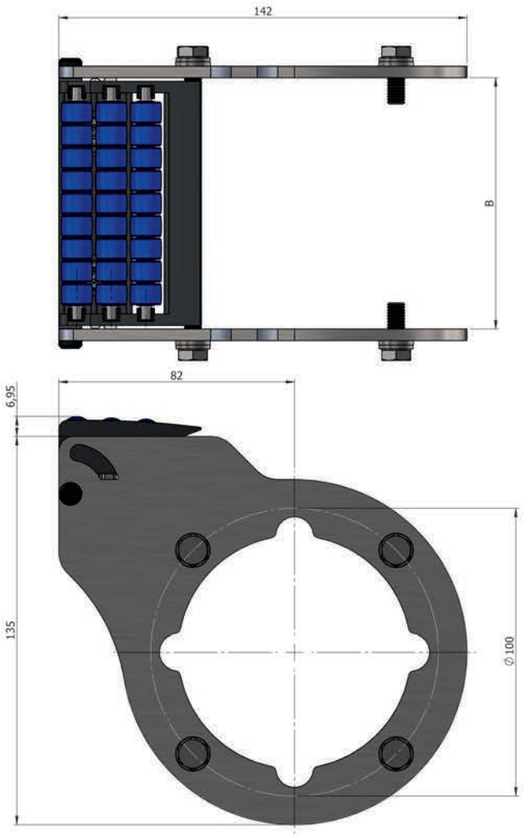

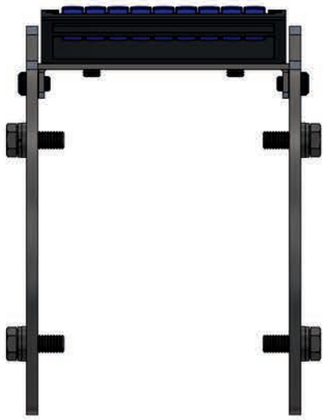

Dimensions - Abmessungen - Dimensions - Dimensiones

	B =
ETS TRANSFER MODULE SINGLE	WIDENESS DRIVE OR RETRUN UNIT

Others on request, Andere auf Anfrage,
Autres sur demande, Otros sobre consulta

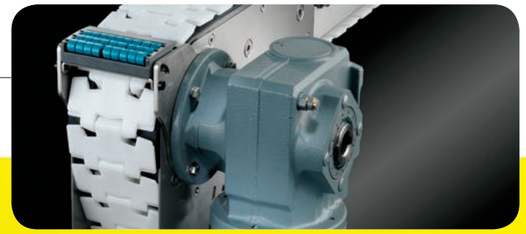

1	Transfer module double; general
2	Transfer module double

Dimensions - Abmessungen - Dimensions - Dimensiones

Art Nr. Pos 1		
ETP040801010000	ETS TRANSFER MODULE SINGLE; GENERAL	1 incl. fastners
Material	Stainless steel, Edelstahl, Acier inoxydable, Acero inoxidable	

Art Nr. Pos 2		
ETP040801010085	ETS TRANSFER MODULE DOUBLE; 85	1 incl. fastners
ETP040801010140	ETS TRANSFER MODULE DOUBLE; 140	1 incl. fastners
ETP040801010200	ETS TRANSFER MODULE DOUBLE; 200	1 incl. fastners
Material	Stainless steel, Edelstahl, Acier inoxydable, Acero inoxidable, PBT, POM	

Others on request, Andere auf Anfrage, Autres sur demande, Otros sobre consulta

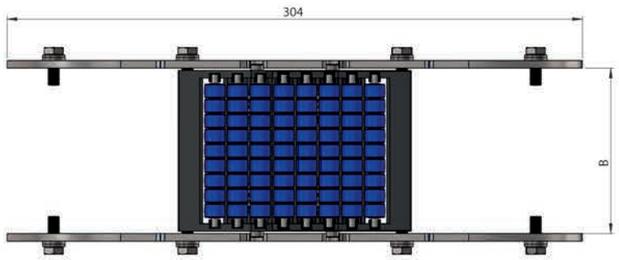

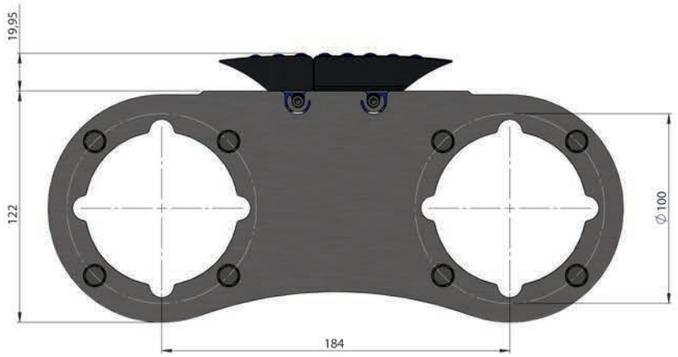

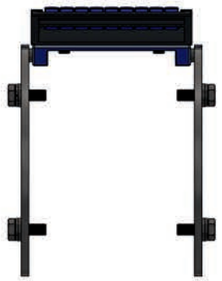

Dimensions - Abmessungen - Dimensions - Dimensiones

	B =
ETS TRANSFER MODULE DOUBLE	WIDENESS DRIVE OR RETRUN UNIT

Others on request, Andere auf Anfrage,
Autres sur demande, Otros sobre consulta

1	Transfer module double; general
2	Transfer module double

Dimensions - Abmessungen - Dimensions - Dimensiones

Art Nr. Pos 1		
ETP040801020000	ETS TRANSFER MODULE DOUBLE; GENERAL	1 incl. fastners
Material	Stainless steel, Edelstahl, Acier inoxydable, Acero inoxidable	

Art Nr. Pos 2		
ETP040801020085	ETS TRANSFER MODULE DOUBLE; 85	1 incl. fastners
ETP040801020140	ETS TRANSFER MODULE DOUBLE; 140	1 incl. fastners
ETP040801020200	ETS TRANSFER MODULE DOUBLE; 200	1 incl. fastners
Material	Stainless steel, Edelstahl, Acier inoxydable, Acero inoxidable, PBT, POM	

Others on request, Andere auf Anfrage, Autres sur demande, Otros sobre consulta

ETS HORIZONTAL CURVE 80; R=200

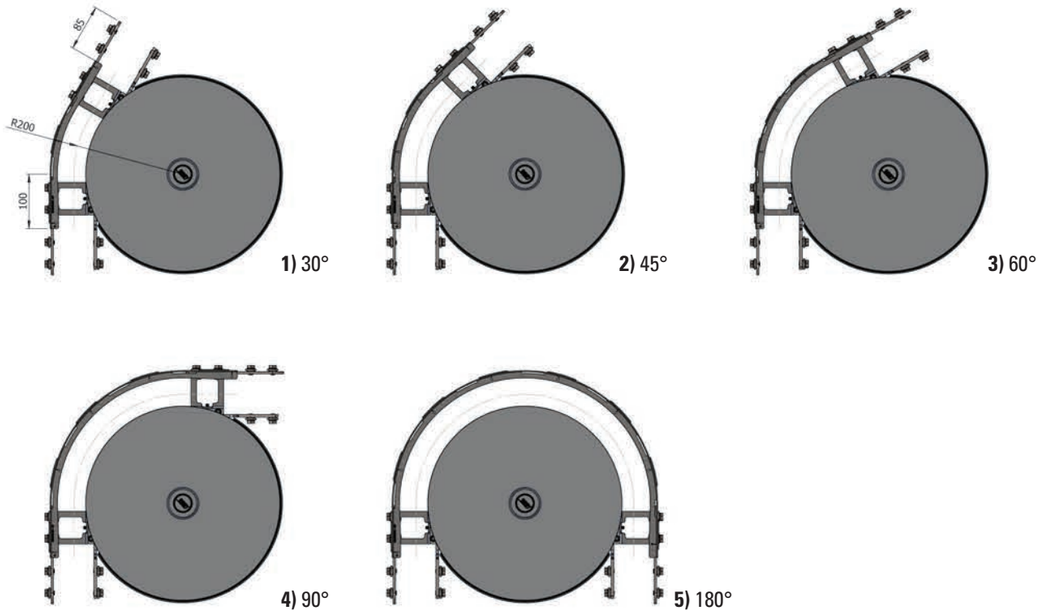

Dimensions - Abmessungen - Dimensions - Dimensiones

ALUMINIUM	STAINLESS STEEL	FW =				
1) ETS040806010085	ETS040906010085	87,5 mm	3,44" inch	Hor. Curve 85 30°	R=200	1
2) ETS040806020085	ETS040906020085	87,5 mm	3,44" inch	Hor. Curve 85 45°	R=200	1
3) ETS040806030085	ETS040906030085	87,5 mm	3,44" inch	Hor. Curve 85 60°	R=200	1
4) ETS040806040085	ETS040906040085	87,5 mm	3,44" inch	Hor. Curve 85 90°	R=200	1
5) ETS040806050085	ETS040906050085	87,5 mm	3,44" inch	Hor. Curve 85 180°	R=200	1
Material	**Material**					
AL + PA 6.6	Stainless steel, Edelstahl, Acier inoxydable, Acero inoxidable + PA 6.6					

Material	Side plates: AL or Stainless steel, Edelstahl, Acier inoxydable, Acero inoxidable	1
	Wheelcurve: PA	1

Others on request, Andere auf Anfrage,
Autres sur demande, Otros sobre consulta

ETS HORIZONTAL CURVE 80; R=500

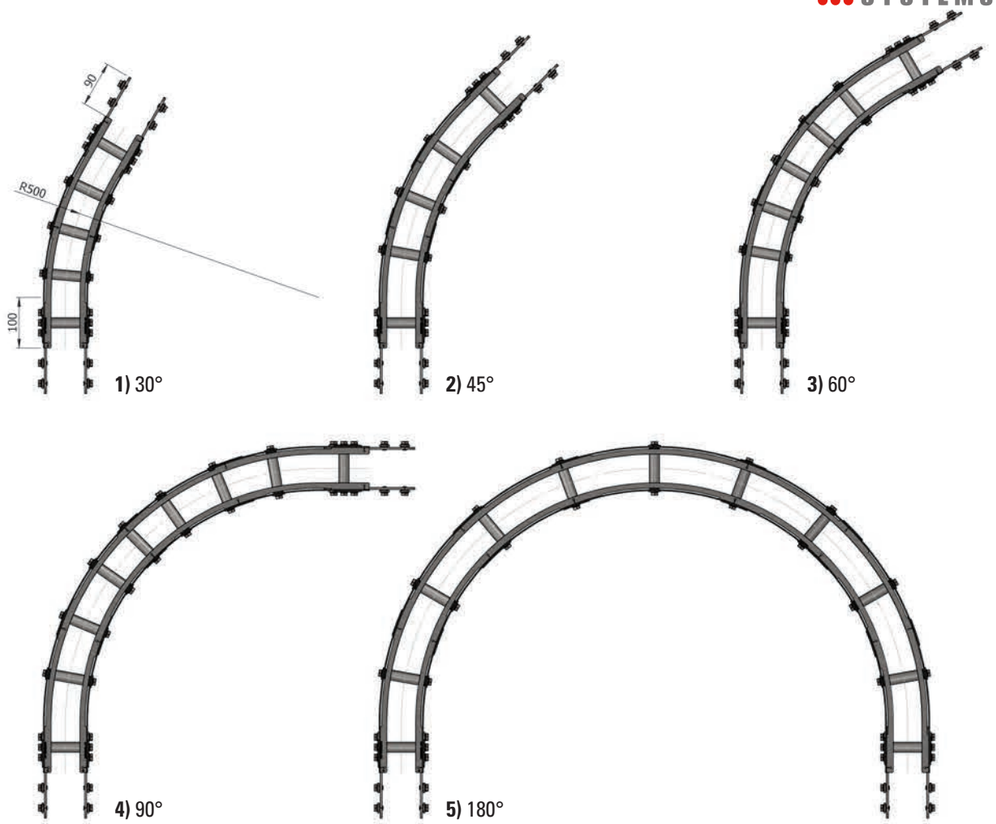

Dimensions - Abmessungen - Dimensions - Dimensiones

ALUMINIUM	STAINLESS STEEL	FW =				
1) ETS040806010185	ETS040906010185	87,5 mm	3,44" inch	Hor. Curve 85 30°	R=500	1
2) ETS040806020185	ETS040906020185	87,5 mm	3,44" inch	Hor. Curve 85 45°	R=500	1
3) ETS040806030185	ETS040906030185	87,5 mm	3,44" inch	Hor. Curve 85 60°	R=500	1
4) ETS040806040185	ETS040906040185	87,5 mm	3,44" inch	Hor. Curve 85 90°	R=500	1
5) ETS040806050185	ETS040906050185	87,5 mm	3,44" inch	Hor. Curve 85 180°	R=500	1
Material	**Material**					
AL	Stainless steel, Edelstahl, Acier inoxydable, Acero inoxidable					

Material	Side plates: AL or Stainless steel, Edelstahl, Acier inoxydable, Acero inoxidable	1

Others on request, Andere auf Anfrage,
Autres sur demande, Otros sobre consulta

ETS HORIZONTAL CURVE 140; R=500

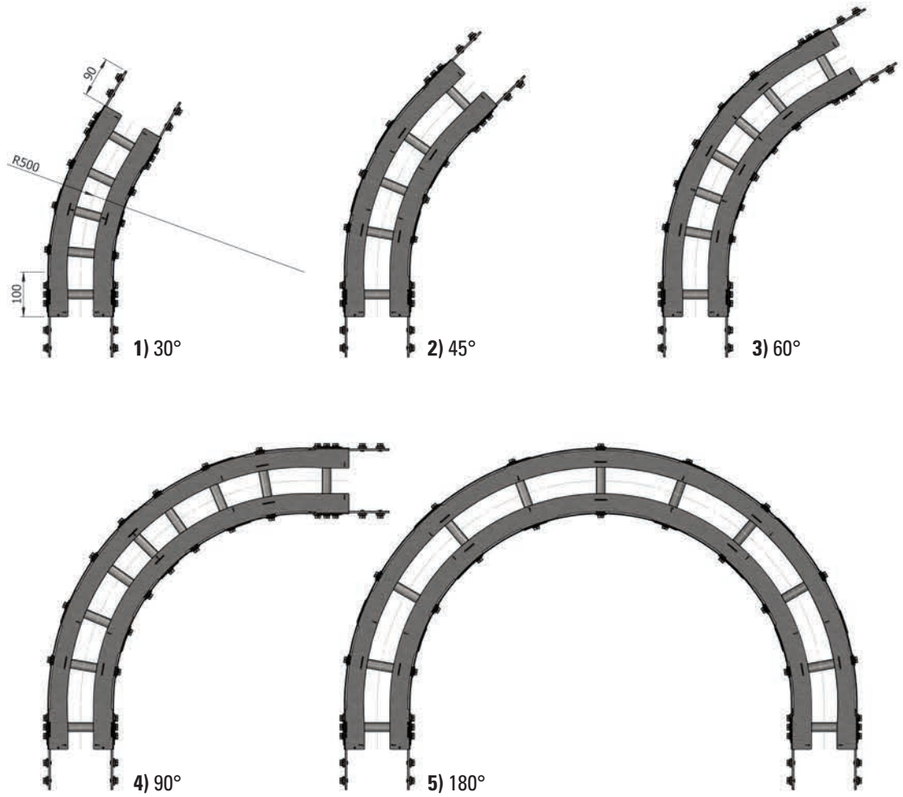

Dimensions - Abmessungen - Dimensions - Dimensiones

ALUMINIUM	STAINLESS STEEL	FW =				
1) ETS040806011140	ETS040906011140	147,5 mm	5,81" inch	Hor. Curve 140 30°	R=500	1
2) ETS040806021140	ETS040906021140	147,5 mm	5,81" inch	Hor. Curve 140 45°	R=500	1
3) ETS040806031140	ETS040906031140	147,5 mm	5,81" inch	Hor. Curve 140 60°	R=500	1
4) ETS040806041140	ETS040906041140	147,5 mm	5,81" inch	Hor. Curve 140 90°	R=500	1
5) ETS040806051140	ETS040906051140	147,5 mm	5,81" inch	Hor. Curve 140 180°	R=500	1
Material	**Material**					
AL	Stainless steel, Edelstahl, Acier inoxydable, Acero inoxidable					

Others on request, Andere auf Anfrage,
Autres sur demande, Otros sobre consulta

ETS HORIZONTAL CURVE 200; R=500

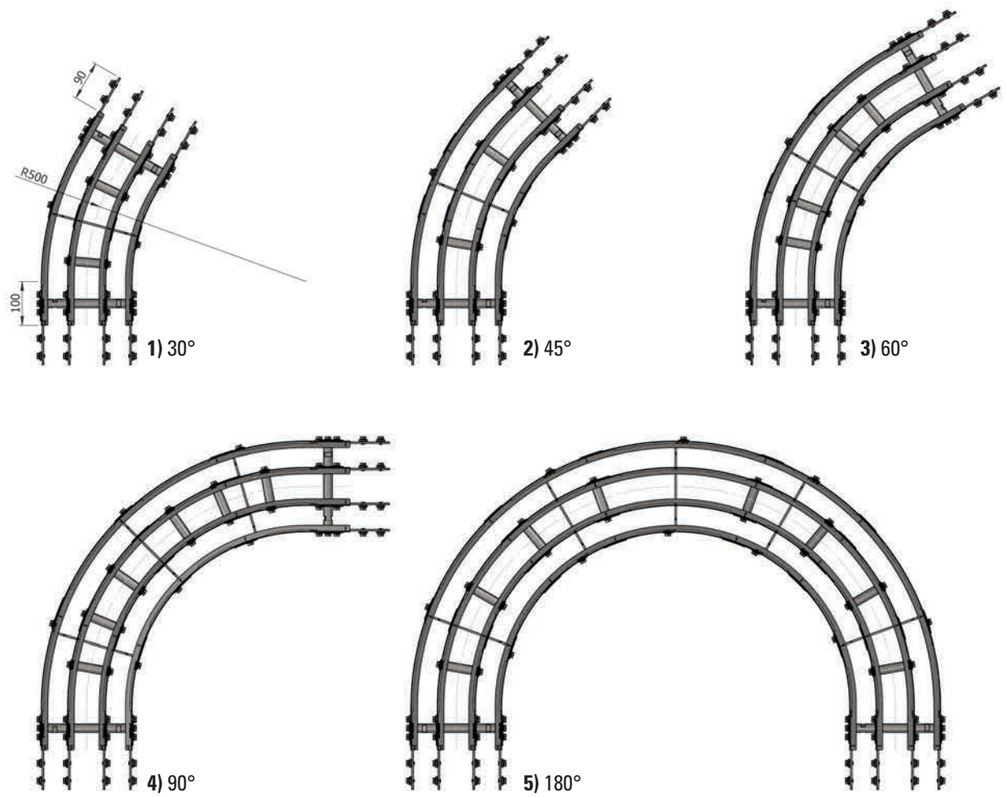

Dimensions - Abmessungen - Dimensions - Dimensiones

ALUMINIUM	STAINLESS STEEL	FW =				
1) ETS040806011200	ETS040906011200	207,5 mm	8,17" inch	Hor. Curve 200 30°	R=500	1
2) ETS040806021200	ETS040906021200	207,5 mm	8,17" inch	Hor. Curve 200 45°	R=500	1
3) ETS040806031200	ETS040906031200	207,5 mm	8,17" inch	Hor. Curve 200 60°	R=500	1
4) ETS040806041200	ETS040906041200	207,5 mm	8,17" inch	Hor. Curve 200 90°	R=500	1
5) ETS040806051200	ETS040906051200	207,5 mm	8,17" inch	Hor. Curve 200 180°	R=500	1
Material	**Material**					
AL	Stainless steel, Edelstahl, Acier inoxydable, Acero inoxidable					

Others on request, Andere auf Anfrage,
Autres sur demande, Otros sobre consulta

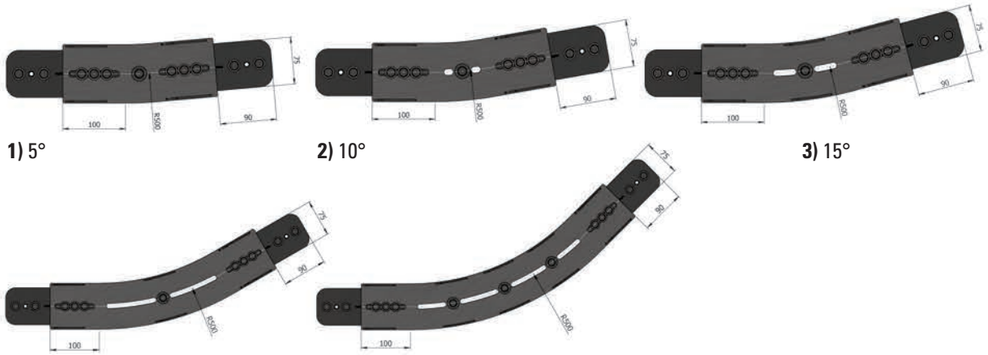

1) 5° 2) 10° 3) 15°

4) 30° 5) 45°

Dimensions - Abmessungen - Dimensions - Dimensiones

STAINLESS STEEL	Frame Wideness			
1) ETS040907010085	87,5mm	3,44" inch	ETS VER. SLIDE CURVE 85; 5° R=500	1
2) ETS040907020085	87,5mm	3,44" inch	ETS VER. SLIDE CURVE 85; 10° R=500	1
3) ETS040907030085	87,5mm	3,44" inch	ETS VER. SLIDE CURVE 85; 15° R=500	1
4) ETS040907040085	87,5mm	3,44" inch	ETS VER. SLIDE CURVE 85; 30° R=500	1
5) ETS040907050085	87,5mm	3,44" inch	ETS VER. SLIDE CURVE 85; 45° R=500	1
1) ETS040907010140	147,5mm	5,81" inch	ETS VER. SLIDE CURVE 140; 5° R=500	1
2) ETS040907020140	147,5mm	5,81" inch	ETS VER. SLIDE CURVE 140; 10° R=500	1
3) ETS040907030140	147,5mm	5,81" inch	ETS VER. SLIDE CURVE 140; 15° R=500	1
4) ETS040907040140	147,5mm	5,81" inch	ETS VER. SLIDE CURVE 140; 30° R=500	1
5) ETS040907050140	147,5mm	5,81" inch	ETS VER. SLIDE CURVE 140; 45° R=500	1
1) ETS040907010200	207,5mm	8,17" inch	ETS VER. SLIDE CURVE 200; 5° R=500	1
2) ETS040907020200	207,5mm	8,17" inch	ETS VER. SLIDE CURVE 200; 10° R=500	1
3) ETS040907030200	207,5mm	8,17" inch	ETS VER. SLIDE CURVE 200; 15° R=500	1
4) ETS040907040200	207,5mm	8,17" inch	ETS VER. SLIDE CURVE 200; 30° R=500	1
5) ETS040907050200	207,5mm	8,17" inch	ETS VER. SLIDE CURVE 200; 45° R=500	1

Material Stainless steel, Edelstahl, Acier inoxydable, Acero inoxidablo

Others on request, Andere auf Anfrage,
Autres sur demande, Otros sobre consulta

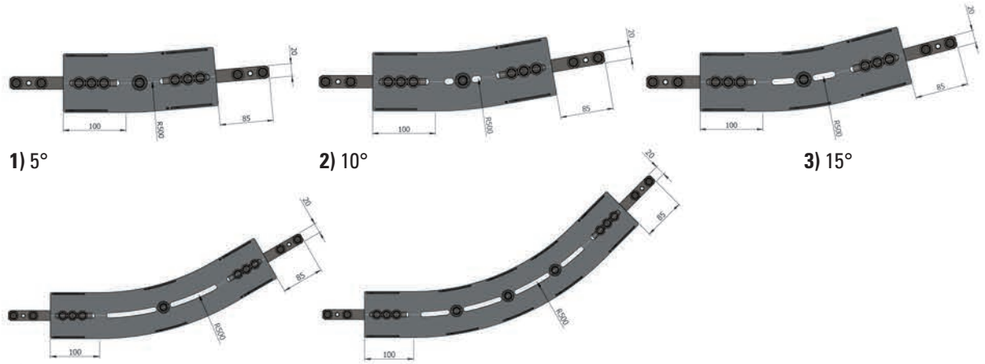

1) 5° 2) 10° 3) 15°

4) 30° 5) 45°

Dimensions - Abmessungen - Dimensions - Dimensiones

ALUMINIUM	Frame Wideness			
1) ETS040807010085	87,5mm	3,44" inch	ETS VER. SLIDE CURVE 85; 5° R=500	1
2) ETS040807020085	87,5mm	3,44" inch	ETS VER. SLIDE CURVE 85; 10° R=500	1
3) ETS040807030085	87,5mm	3,44" inch	ETS VER. SLIDE CURVE 85; 15° R=500	1
4) ETS040807040085	87,5mm	3,44" inch	ETS VER. SLIDE CURVE 85; 30° R=500	1
5) ETS040807050085	87,5mm	3,44" inch	ETS VER. SLIDE CURVE 85; 45° R=500	1
1) ETS040807010140	147,5mm	5,81" inch	ETS VER. SLIDE CURVE 140; 5° R=500	1
2) ETS040807020140	147,5mm	5,81" inch	ETS VER. SLIDE CURVE 140; 10° R=500	1
3) ETS040807030140	147,5mm	5,81" inch	ETS VER. SLIDE CURVE 140; 15° R=500	1
4) ETS040807040140	147,5mm	5,81" inch	ETS VER. SLIDE CURVE 140; 30° R=500	1
5) ETS040807050140	147,5mm	5,81" inch	ETS VER. SLIDE CURVE 140; 45° R=500	1
1) ETS040807010200	207,5mm	8,17" inch	ETS VER. SLIDE CURVE 200; 5° R=500	1
2) ETS040807020200	207,5mm	8,17" inch	ETS VER. SLIDE CURVE 200; 10° R=500	1
3) ETS040807030200	207,5mm	8,17" inch	ETS VER. SLIDE CURVE 200; 15° R=500	1
4) ETS040807040200	207,5mm	8,17" inch	ETS VER. SLIDE CURVE 200; 30° R=500	1
5) ETS040807050200	207,5mm	8,17" inch	ETS VER. SLIDE CURVE 200; 45° R=500	1

Material AL

Others on request, Andere auf Anfrage,
Autres sur demande, Otros sobre consulta

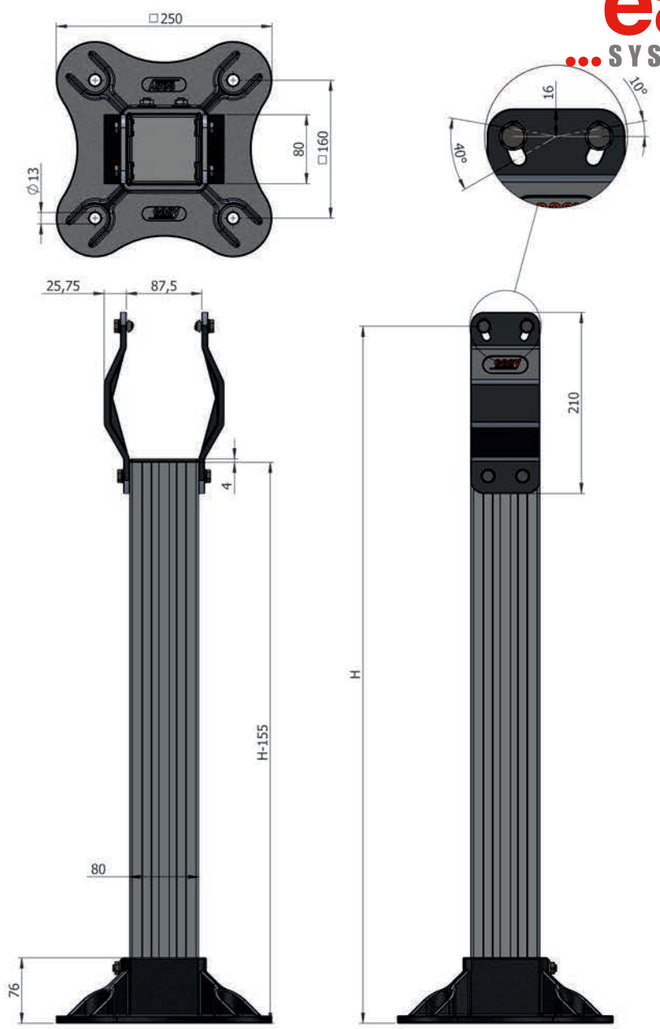

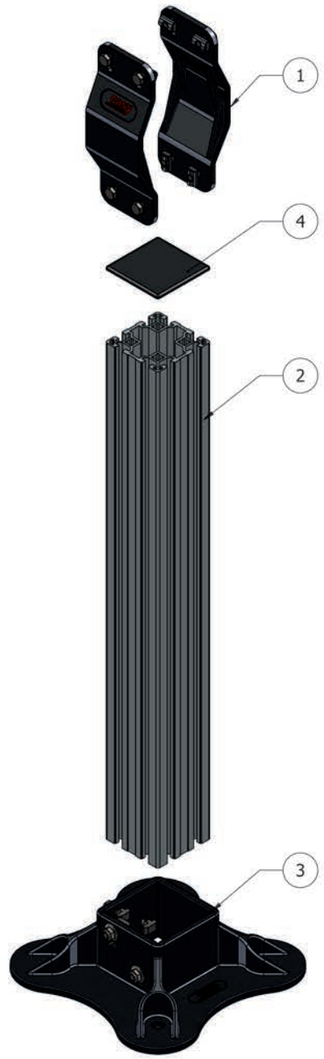

1	I support bracket
2	Profile 80x80L
3	Support base
4	Cap 80x80

Dimensions - Abmessungen - Dimensions - Dimensiones		
FW		
SW Min =	**232 mm**	9,13” inch
H Max =	**1200 mm**	47,25” inch

Always fasten to the floor, Immer am Boden befestigen
Siempre sujete al suelo, Toujour attacher à l’étage

Others on request, Andere auf Anfrage,
Autres sur demande, Otros sobre consulta

Art Nr. Pos 1	Material	
ETS040808030000 I I support bracket	PA FG	1 set of 2 pieces, incl. fasteners

Art Nr. Pos 2	Material	
020102070009 I Profile 40x80L, L= 6070 mm	AL	1

Art Nr. Pos 3	Material	
ETS040808040000 I Support base	AL RAL9005	1

Art Nr. Pos 4	Material	
020102140000 I CAP 80x80L	PA FG	10

Others on request, Andere auf Anfrage, Autres sur demande, Otros sobre consulta

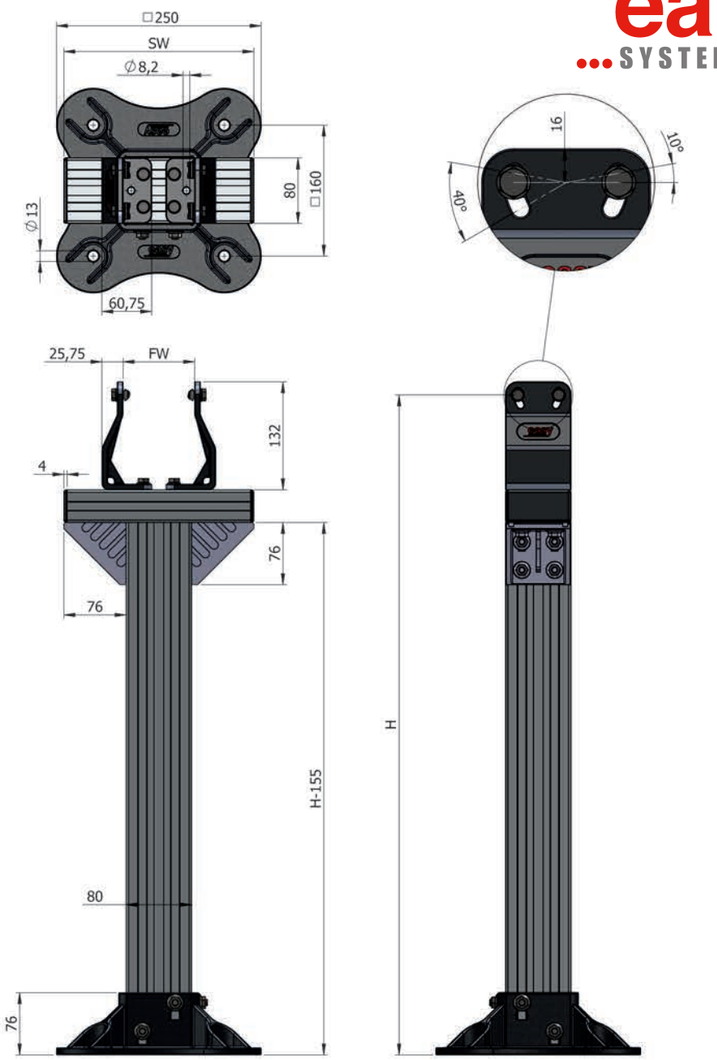

Dimensions - Abmessungen - Dimensions - Dimensiones		
FW =		
SW Min =	**232 mm**	9,13" inch
We advise a maximum (FW) than 400 mm, Wir empfehlen eine maximale Breite von 400 mm		
Se aconseja un máximo de ancho de 400 mm, Nous vous conseillons une gamme maximale de 400 mm		
H Max =	**1200 mm**	47,25" inch
Always fasten to the floor, Immer am Boden befestigen		
Siempre sujete al suelo, Toujour attacher à l'étage		

Others on request, Andere auf Anfrage,
Autres sur demande, Otros sobre consulta

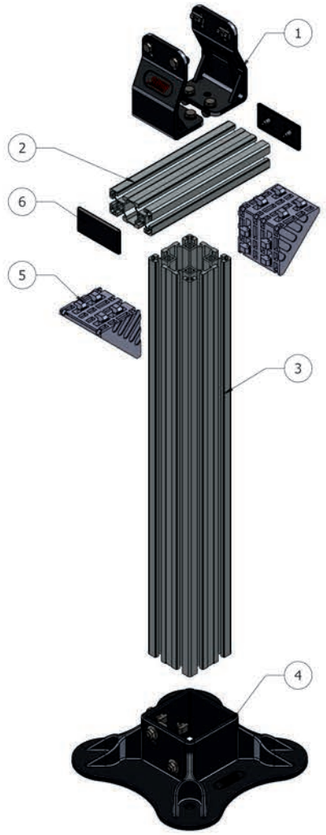

1	L support bracket
2	Profile 40x80 L
3	Profile 80x80 L
4	Support base
5	Bracket 80
6	Cap 40x80

Art Nr. Pos 1	Material	
ETS040808020000 I L support bracket	PA FG	1 set of 2 pieces, incl. fasteners

Art Nr. Pos 2	Material	
020102070008 I Profile 40x80L, L= 6070 mm	AL	1

Art Nr. Pos 3	Material	
020102070009 I Profile 80x80L, L= 6070 mm	AL	1

Art Nr. Pos 4	Material	
ETS040808040000 I Support base	AL RAL9005	1

Art Nr. Pos 5	Material	
020102160001 I Bracket 80x80	AL	1 piece, incl. fasteners

Art Nr. Pos 6	Material	
020102140000 I CAP 40x80	PA FG	10

Others on request, Andere auf Anfrage, Autres sur demande, Otros sobre consulta

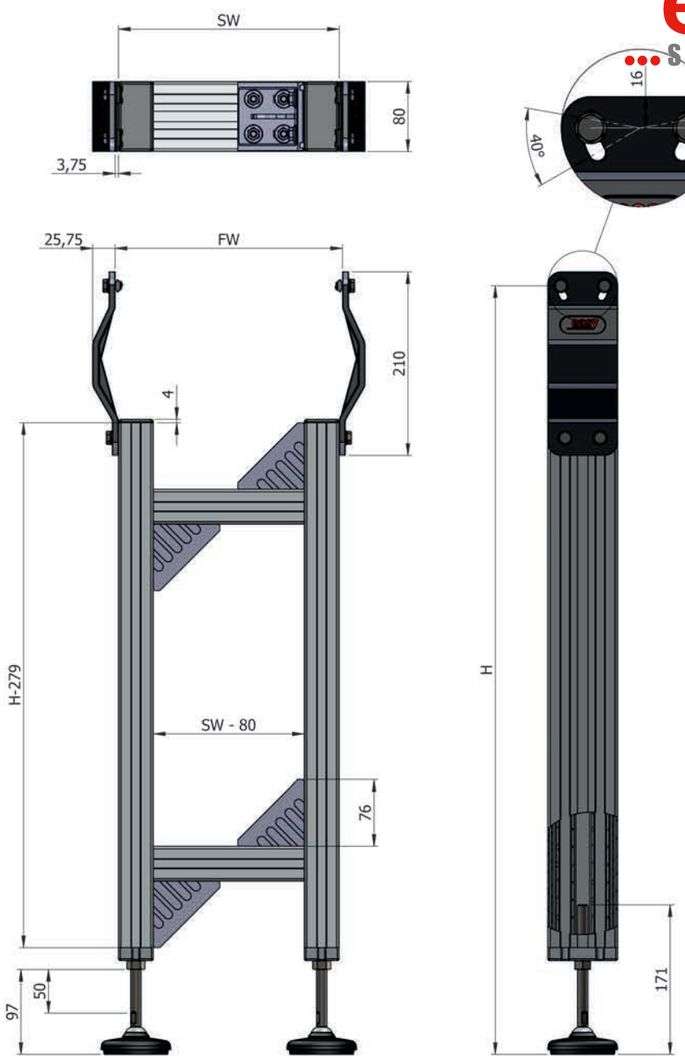

Dimensions - Abmessungen - Dimensions - Dimensiones		
FW =		
SW Min =	**156 mm**	6,14” inch
H Max =	**1200 mm**	47,25” inch
Always fasten to the floor, Immer am Boden befestigen		
Siempre sujete al suelo, Toujour attacher à l’étage		

Others on request, Andere auf Anfrage,
Autres sur demande, Otros sobre consulta

1	I support bracket
2	Profile 40x80L
3	Profile 40x80L
4	Foot plate 40x80L
5	Hinged feet Ø80
6	Hexagon nut
7	Bracket 80
8	Cap 40x80

Art Nr. Pos 1	Material	
ETS040808030000 I I support bracket	PA FG	1 set of 2 pieces, incl. fasteners

Art Nr. Pos 2 + 3	Material	
020102070008 I Profile 40x80L, L= 6070 mm	AL	1

Art Nr. Pos 4	Material	
020102150000 I Foot plate 40x80L	AL	1 piece, incl. fasteners

Art Nr. Pos 5	Material	
040707020003 I Hinged feet Ø80	Screw jack: Stainless steel, Foot: Synthetic plastic	1

Art Nr. Pos 6	Material	
BV093412000A2 I Hexagon nut	Stainless steel, Edelstahl, Acier inoxydable, Acero inoxidable	100

Art Nr. Pos 7	Material	
020102160001 I Bracket 80	AL	1 piece, incl. fasteners

Art Nr. Pos 8	Material	
020102140000 I Cap 40x80	PA FG	10

Others on request, Andere auf Anfrage, Autres sur demande, Otros sobre consulta

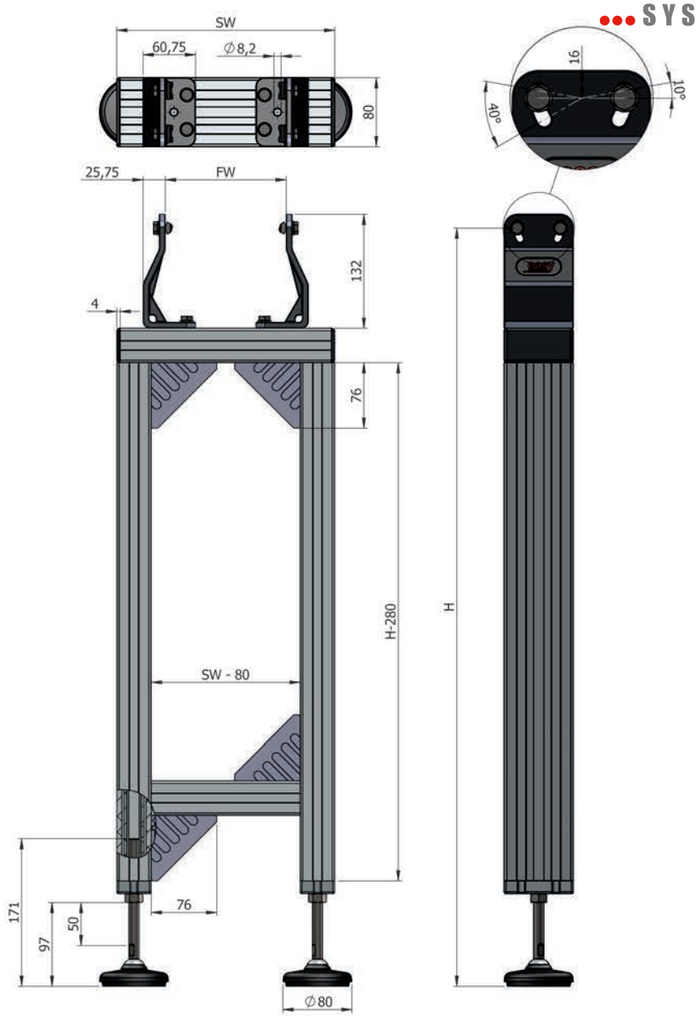

Dimensions - Abmessungen - Dimensions - Dimensiones		
FW =		
SW Min =	**232 mm**	9,13" inch
H Max =	**1200 mm**	47,25" inch
Always fasten to the floor, Immer am Boden befestigen		
Siempre sujete al suelo, Toujour attacher à l'étage		

Others on request, Andere auf Anfrage,
Autres sur demande, Otros sobre consulta

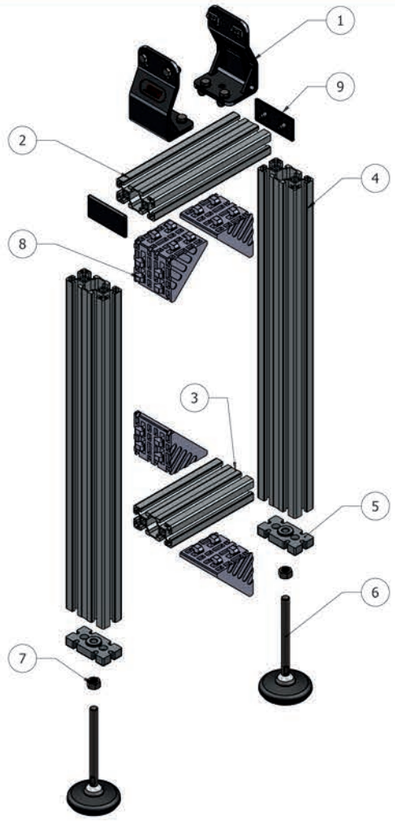

1	L support bracket
2	Profile 40x80L
3	Profile 40x80L
4	Profile 40x80L
5	Foot plate 40x80
6	Hinged feet Ø80
7	Hexagon nut
8	Bracket 80
9	Cap 40x80

Art Nr. Pos 1	Material	
ETS040808020000 I L support bracket	PA FG	1 set of 2 pieces, incl. fasteners

Art Nr. Pos 2 + 3 + 4	Material	
020102070008 I Profile 40x80L, L= 6070 mm	AL	1

Art Nr. Pos 5	Material	
020102150000 I Foot plate 40x80L	AL	1 piece, incl. fasteners

Art Nr. Pos 6	Material	
040707020003 I Hinged feet Ø80	PA FG + stainless steel, PA + edelstahl PA Acier inoxyable, PA + acevo inoxidable	1

Art Nr. Pos 7	Material	
BV093412000A2 I Hexagon nut	Stainless steel	100

Art Nr. Pos 8	Material	
020102160001 I Bracket 80	AL	1 piece, incl. fasteners

Art Nr. Pos 9	Material	
020102140000 I Cap 40x80	PA FG	10

Others on request, Andere auf Anfrage, Autres sur demande, Otros sobre consulta

	Dimensions - Abmessungen - Dimensions - Dimensiones	
FW =	**87,5 mm**	3,44" inch
H =	**1200 mm**	47,25" inch
	Always fasten the hinged feet to the floor	

Others on request, Andere auf Anfrage,
Autres sur demande, Otros sobre consulta

1	U-Bracket support
2	Welded round tube
3	Support base; tripod

Art Nr. Pos 1	Material	
ETS040908010000 I 80 SS	PA FG, Stainless steel, Edelstahl Acier inoxydable, Acero inoxidable	1 set, incl. fasteners

Art Nr. Pos 2	Material	
020102070005 I 48,3X1,6, L=6Mtr	Stainless steel, Edelstahl, Acier inoxydable, Acero inoxidable	1

Art Nr. Pos 3	Material	
ETS040908040000	PA FG	1 piece
	incl. fasteners & hinged feets, Inkl. Verbindungselemente und Gelenkfüßen, incl. attaches et les pieds articulés, incl. elementos de fijación y los pies con bisagras	

Others on request, Andere auf Anfrage, Autres sur demande, Otros sobre consulta

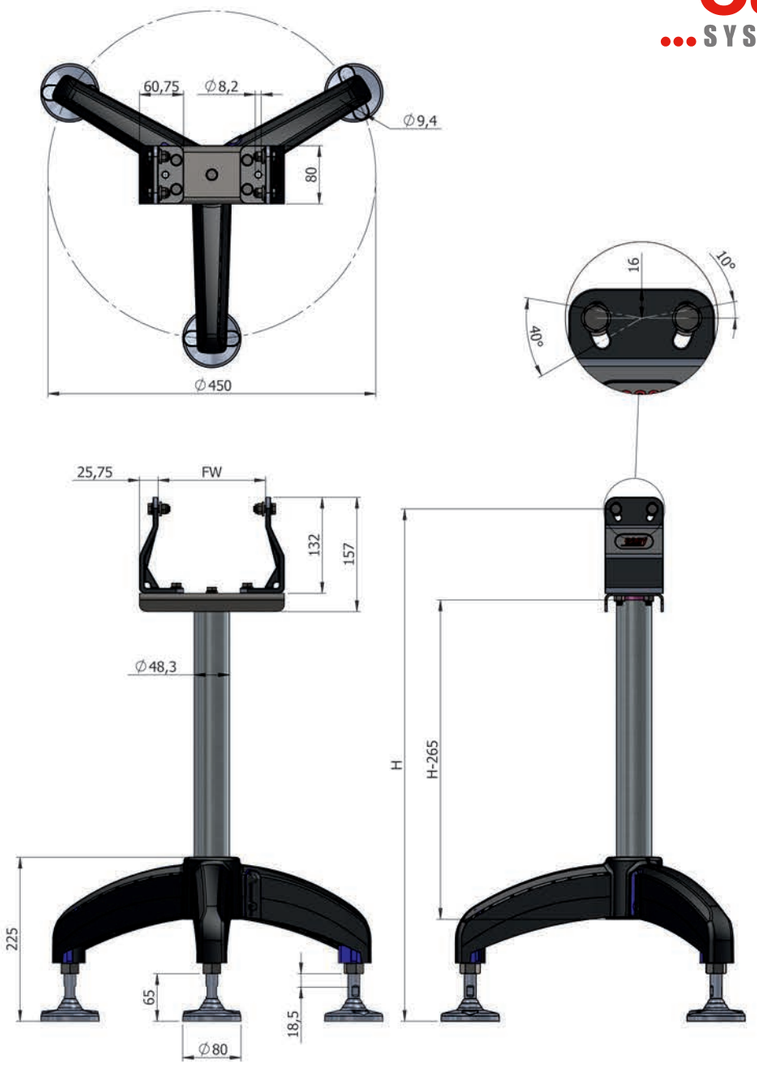

	Dimensions - Abmessungen - Dimensions - Dimensiones	
FW =	**147,5**	**207,5 mm**
	5,80"	8,17" inch
H =	**1200 mm**	47,25" inch
	Always fasten the hinged feet to the floor	

Others on request, Andere auf Anfrage,
Autres sur demande, Otros sobre consulta

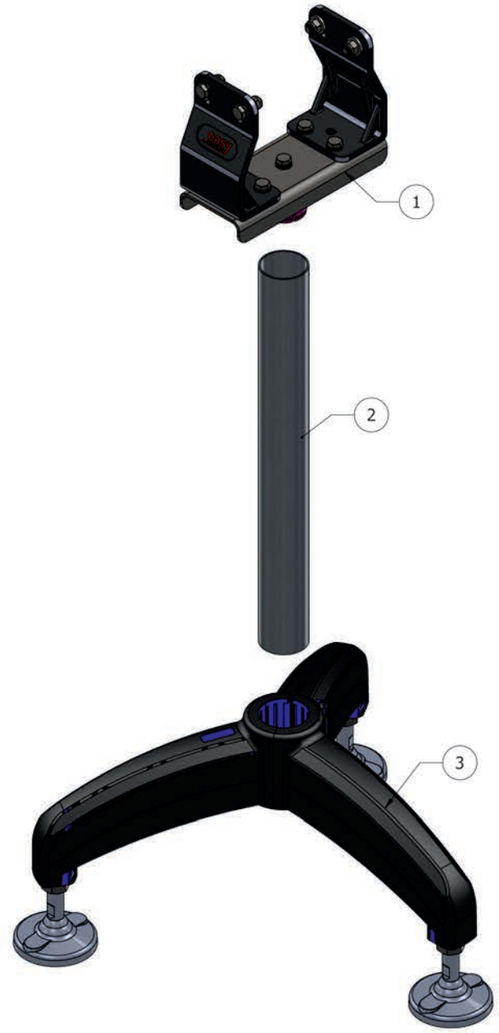

1	L-Bracket support
2	Welded round tube
3	Support base; tripod

Art Nr. Pos 1	Material	
ETS040908010140 I 140 SS	PA FG, Stainless steel, Edelstahl Acier inoxydable, Acero inoxidable	1 set, incl. fasteners
ETS040908010200 I 200 SS	PA FG, Stainless steel, Edelstahl Acier inoxydable, Acero inoxidable	1 set, incl. fasteners

Art Nr. Pos 2	Material
020102070005 I 48,3X1,6, L=6Mtr	Stainless steel, Edelstahl, Acier inoxydable, Acero inoxidable 1

Art Nr. Pos 3	Material	
ETS040908040000	PA FG incl. fasteners & hinged feets, Inkl. Verbindungselemente und Gelenkfüßen, incl. attaches et les pieds articulés, incl. elementos de fijación y los pies con bisagras	1 piece

Others on request, Andere auf Anfrage, Autres sur demande, Otros sobre consulta

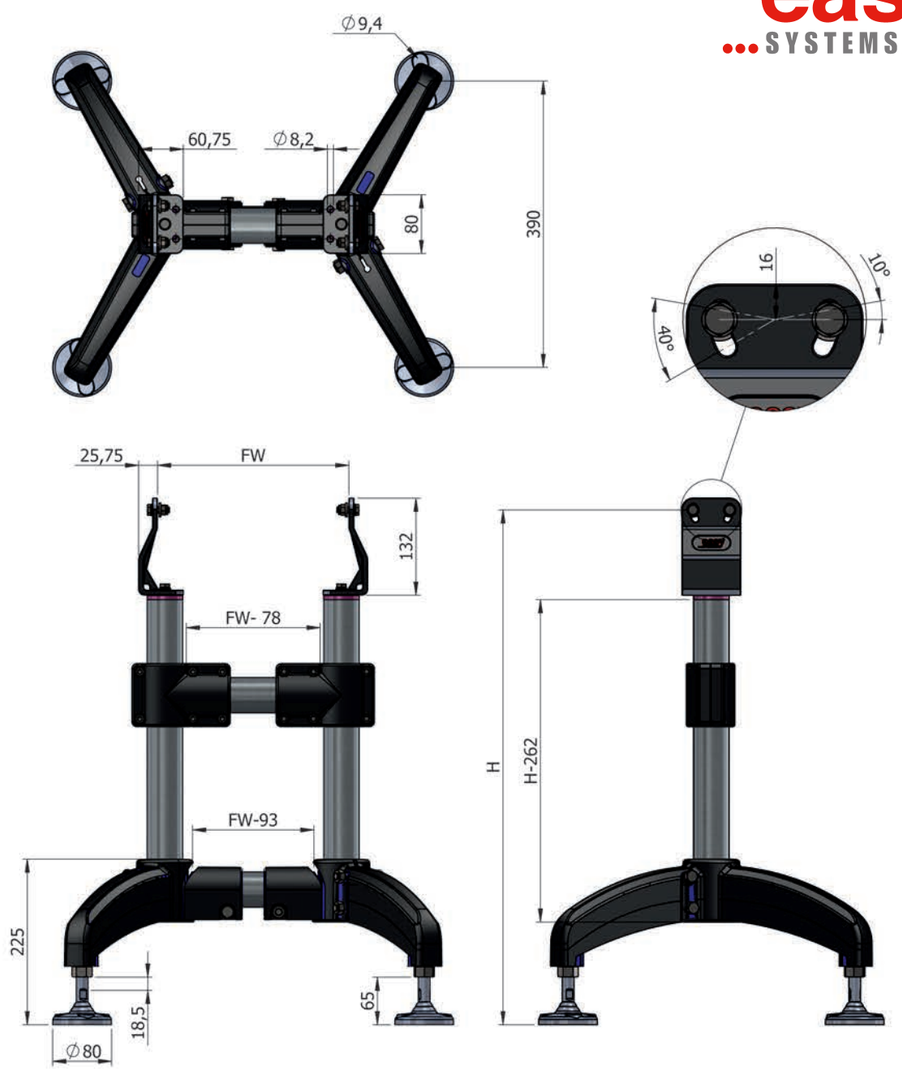

Dimensions - Abmessungen - Dimensions - Dimensiones		
FW Min =	**230 mm**	9,06” inch
H Max =	**1200 mm**	47,25” inch

Others on request, Andere auf Anfrage,
Autres sur demande, Otros sobre consulta

1	L-Bracket support
2	Welded round tube
3	Support base; bipod
4	Connection joint

Art Nr. Pos 1	Material	
ETS040908020000	PA FG	1 set of 2 pieces, incl. fasteners

Art Nr. Pos 2	Material	
020102070005 I 48,3X1,6, L=6Mtr	Stainless steel, Edelstahl, Acier inoxydable, Acero inoxidable	1

Art Nr. Pos 3	Material	
ETS040908040001	PA FG	1 piece

incl. fasteners & hinged feets, Inkl. Verbindungselemente und Gelenkfüßen,
incl. attaches et les pieds articulés, incl. elementos de fijación y los pies con bisagras

Art Nr. Pos 4	Material	
ETS040907040002 I Connection joint Ø48,3	PA FG	1 piece, incl. fasteners

Others on request, Andere auf Anfrage, Autres sur demande, Otros sobre consulta

ETS SYSTEM

Table Top Conveyor
Kettenförderer
Conveyeur de table
Transportador de charnelas

LEG SUPPORT

EBS, EMBS, ETS AND EMCS IN HEIGHT ADJUSTABLE

easy ...SYSTEMS

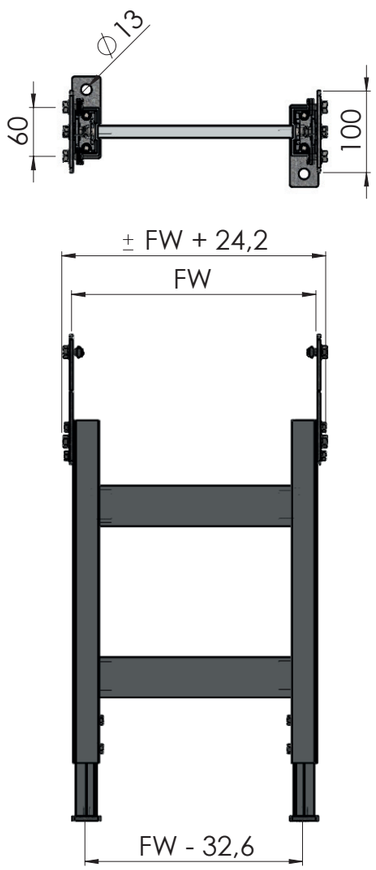

EBS, ETS & EMCS CONFIGURATION

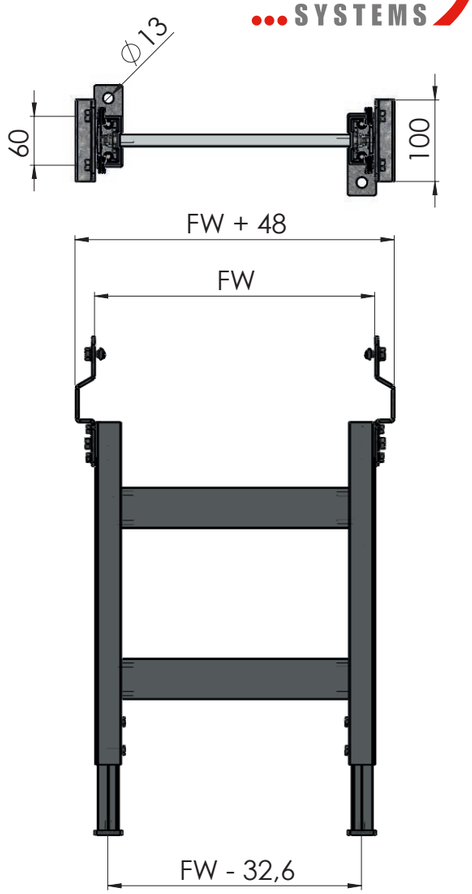

EMBS CONFIGURATION

TECHNICAL DATA

General technical data	
Max. load capacity	200 kg
Min. Adjustable Height	±325 mm
Max. Adjustable Height	±2500 mm
Number of cross members	Type 01 & 02 – 1 piece
	Type 03 & 04 – 2 pieces
	Type 05 – 3 pieces
Side Profile	
Suitable side profile material	Aluminium

Others on request, Andere auf Anfrage,
Autres sur demande, Otros sobre consulta

Type selection

	Conveyor System				
	EBS 40	EBS 80	ETS	EMBS	EMCS
Type	Adjustable Height [mm]*				
01.	325 – 400	325 – 440	355 – 430	360 – 435	335 – 470
02.	395 – 540	435 – 580	425 – 570	430 – 575	465 – 610
03.	535 – 820	575 – 860	565 – 850	570 – 855	605 – 890
04.	815 – 1380	855 – 1420	845 – 1410	850 – 1415	885 – 1450
05.	1375 – 2500	1415 – 2540	1405 – 2530	1410 – 2535	1445 – 2570

General Support Stand CONFIGURATOR

Please create the reference number with the following configurator.

1 TYPE
GSS

2 Conveyor System
EBS 40 | EBS 80 | ETS | EMBS | EMCS

3 System Width
Enter Conveyor System Width
Standard:

EBS 40	EBS 80	ETS	EMBS	EMCS
100	200	80	255	170
200	400	140	340	255
300	600	200	425	340
400	800		510	425
500	1000			510
600	1200			680
				850

Special: On request

4 Height
01 | 02 | 03 | 04 | 05

1		2		3		4
GSS	-		-		-	

ORDER EXAMPLE

Example for a reference number:
GSS – ETS – 140 – 03

This reference number stand for a General Support Stand with the clearance for an ETS 140 conveyor type with an adjustable top of belt height between 565 mm and 850 mm.

Note:
1. Longitudinal or diagonal cross members are not included.
2. Dependable on conveyor speed, load, start/stops, etc. additional cross members noted under '1.' are not included.

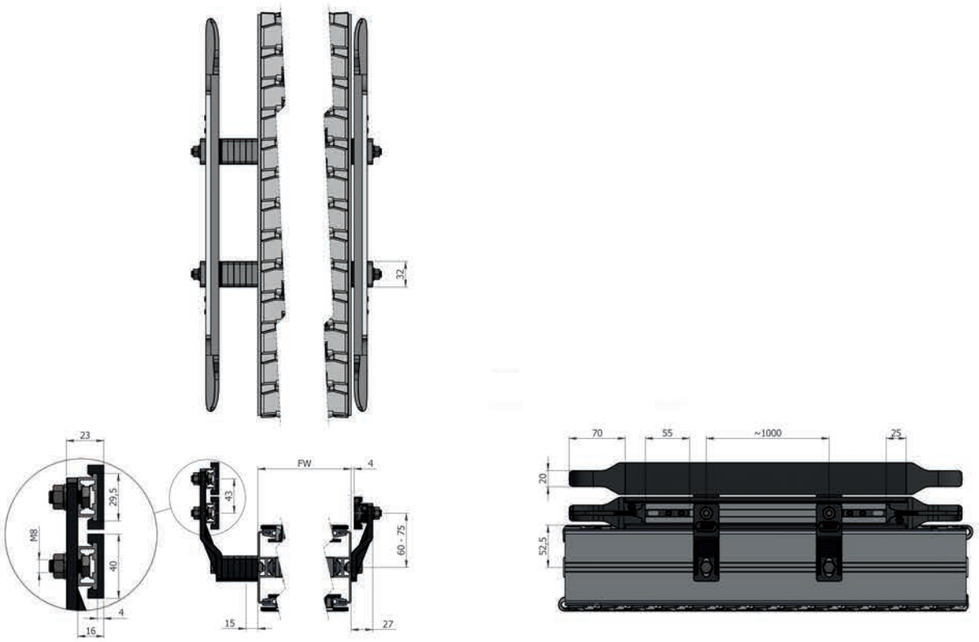

Others on request, Andere auf Anfrage,
Autres sur demande, Otros sobre consulta

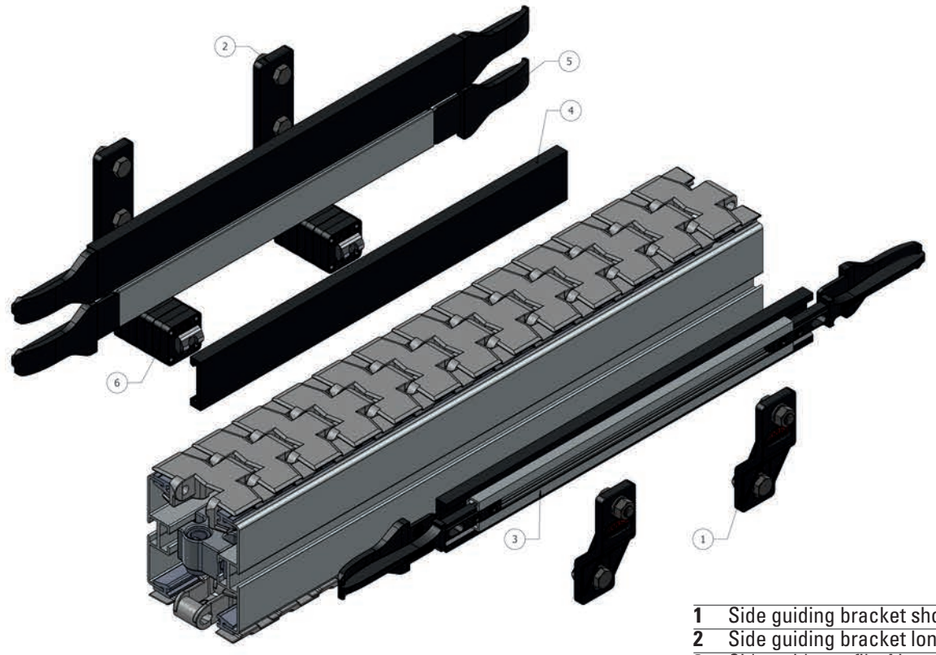

1	Side guiding bracket short
2	Side guiding bracket long
3	Side guide profile AL
4	Side guide cover
5	Guide end
6	Guide spacer

Art Nr. Pos 1	Material	
ETS040809010000 I Side guiding short	PA FG	1 piece, incl. fasteners

Art Nr. Pos 2	Material	
ETS040809020000 I Side guiding long	PA FG	1 piece, incl. fasteners

Art Nr. Pos 3	Material	
ETS040809000000 I Side guide profile AL	AL	1 piece; L=5.6mtr

Art Nr. Pos 4	Material	
ECP040103000000 I Side guiding cover	PE	1 piece; l=3mtr

Art Nr. Pos 5	Material	
ETS040809050000 I Guide end 40	PA FG	1 set of pieces, incl. fasteners

Art Nr. Pos 6	Material	
ETS040809040000 I Guide spacer	PA FG	10

Others on request, Andere auf Anfrage, Autres sur demande, Otros sobre consulta

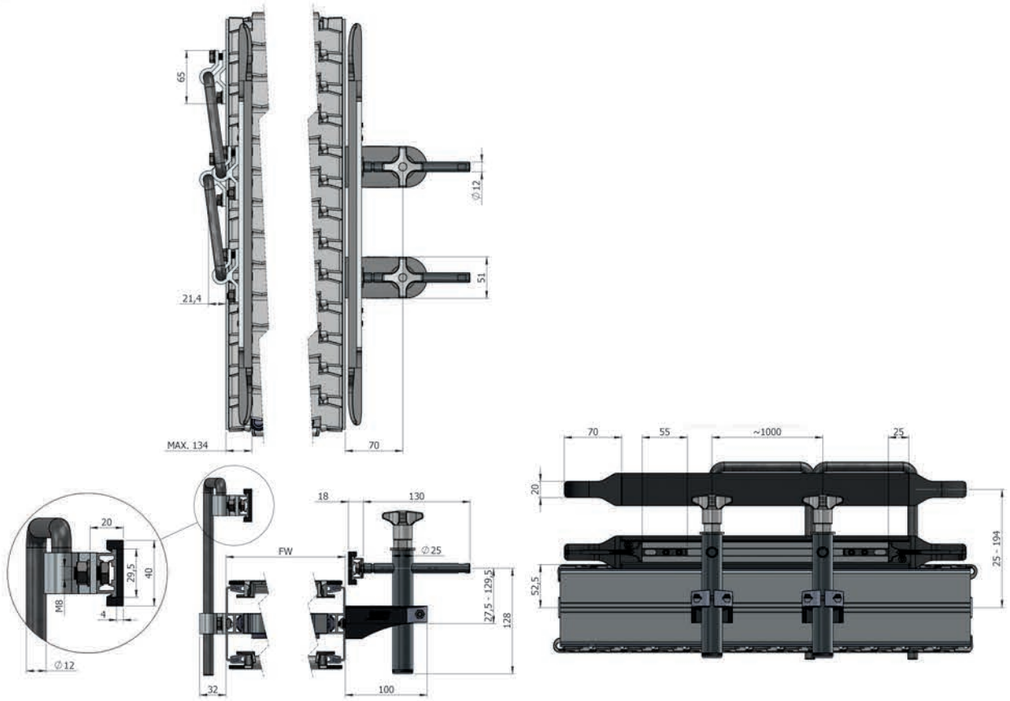

Others on request, Andere auf Anfrage,
Autres sur demande, Otros sobre consulta

1	Adjustable side guide
2	Adjustable side guide
3	Side guide profile
4	Side guide cover
5	Guide end

Art Nr. Pos 1	Material	
ETS040809030000 I Side guide	PA FG + stainless steel, PA + edelstahl PA Acier inoxyable, PA + acevo inoxidable	1 piece, incl. fasteners

Art Nr. Pos 2	Material	
ERA040409010000 I Side guide	AL + steel galvanised, AL + stahl verzinkt AL + Acier galvanisé, AL + Acero galvanizado	1 piece, incl. fasteners

Art Nr. Pos 3	Material	
ETS040809000000 I Side guiding profile	AL	1 piece; L=5.6mtr

Art Nr. Pos 4	Material	
ECP040103000000 I Side guide cover	PE	1 piece; l=3mtr

Art Nr. Pos 5	Material	
ETS040809050000 I Guide end 40	PA FG	1 set of pieces, incl. fasteners

Others on request, Andere auf Anfrage, Autres sur demande, Otros sobre consulta

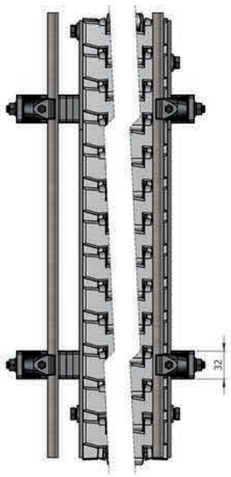

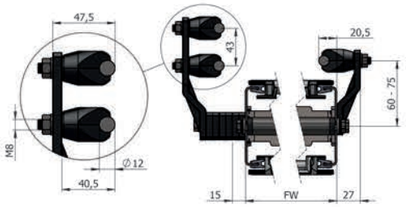

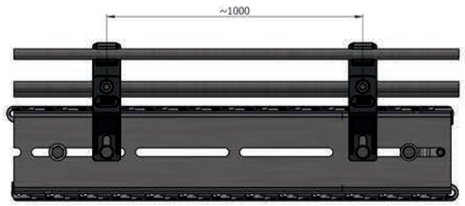

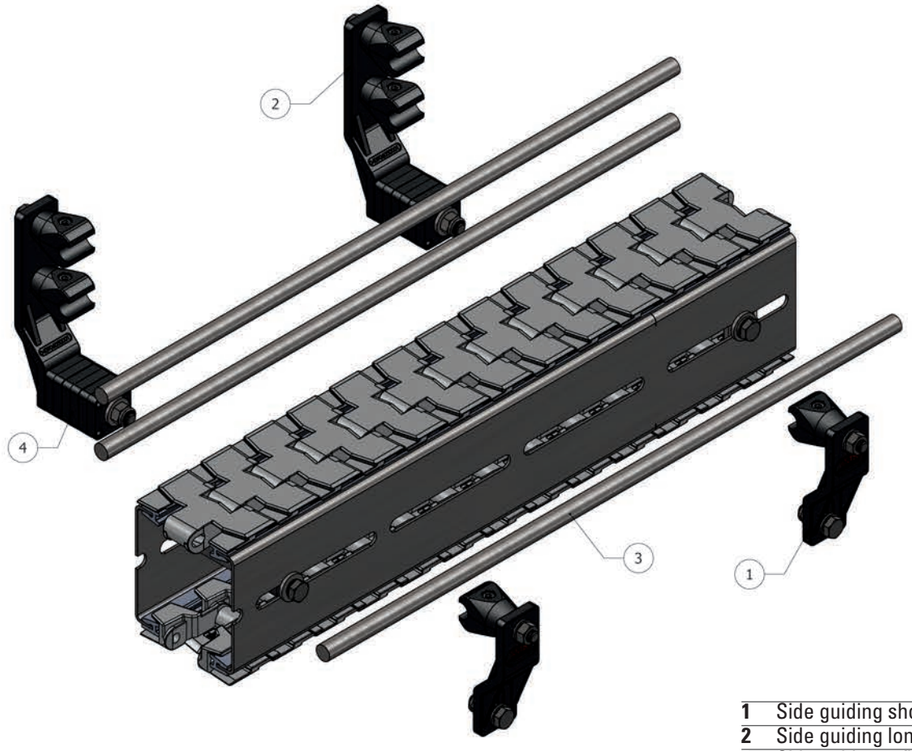

1	Side guiding short
2	Side guiding long
3	Side guide profile Ø12
4	Guide spacer

Art Nr. Pos 1	Material	
ETS040909010000 I Short version	PA FG	1 piece, incl. fasteners

Art Nr. Pos 2	Material	
ETS040909020000 I Long version	PA FG	1 piece, incl. fasteners

Art Nr. Pos 3	Material	
ETS040909000000 I Ø12	Stainless steel, Edelstahl, Acier inoxydable, Acero inoxidable	1 piece; L=3meter

Art Nr. Pos 4	Material	
ETS040809040000 I Spacer	PA FG	10

Others on request, Andere auf Anfrage, Autres sur demande, Otros sobre consulta

Others on request, Andere auf Anfrage, Autres sur demande, Otros sobre consulta

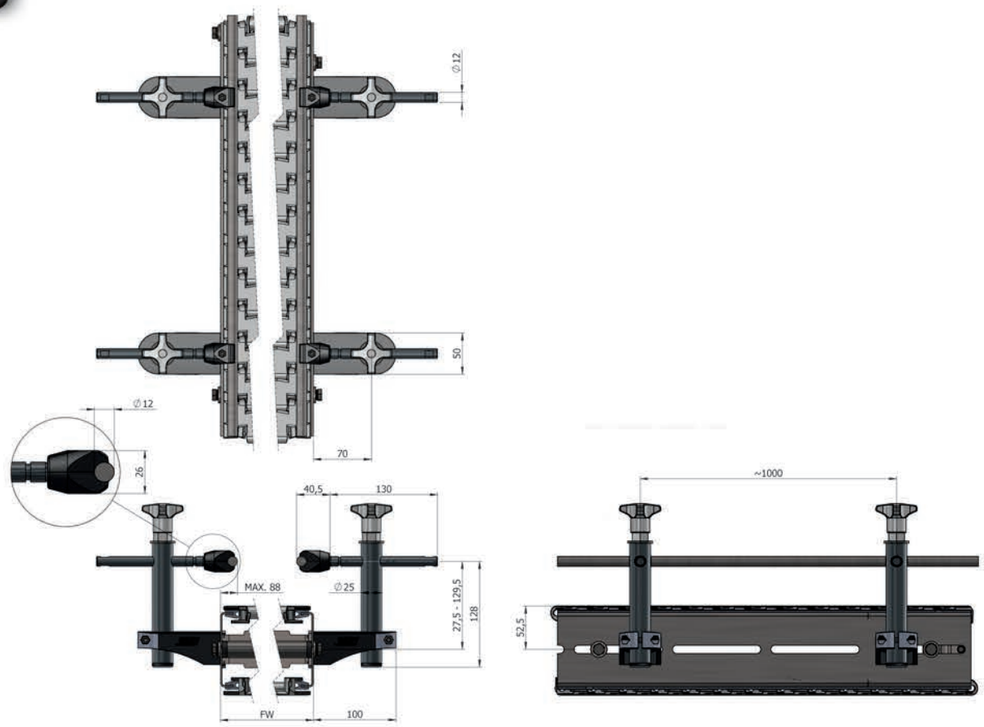

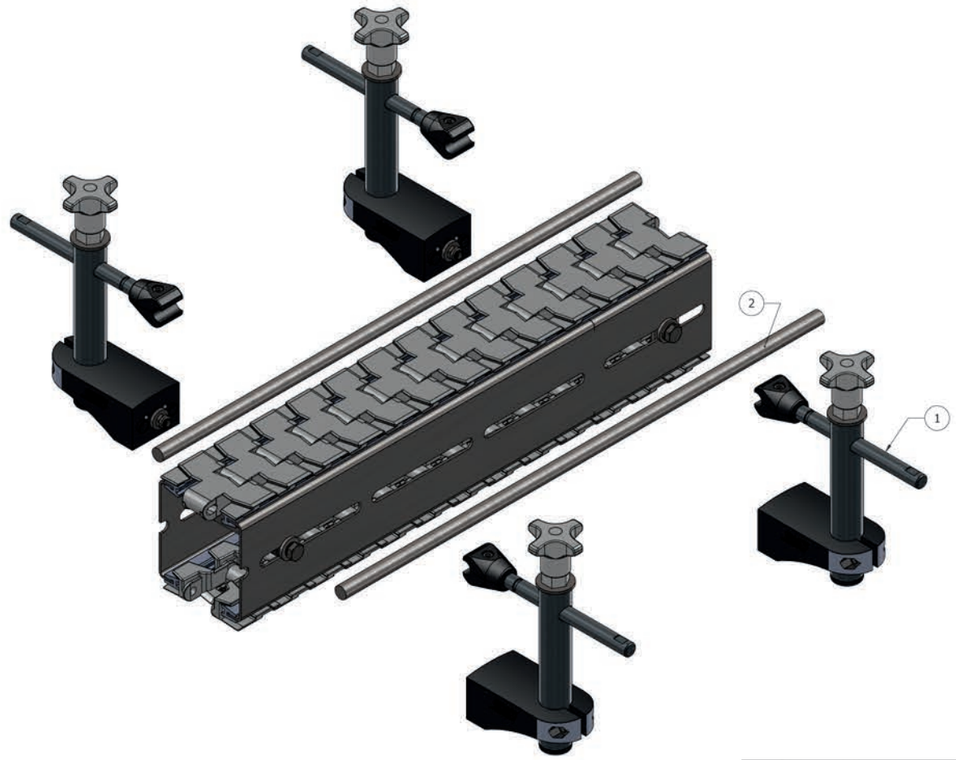

1	Side guiding
2	Guide profile

Art Nr. Pos 1	Material	
ETS040909030000 I Adjustable	Bracket: PA FG, knob: PA FG / NPB Tube/shaft: Stainless steel, Finishing cap: LDPE	1 piece, incl. fasteners

Art Nr. Pos 2	Material	
ETS040909000000 I Ø12	Stainless steel	1 piece, L=3mtr

Others on request, Andere auf Anfrage, Autres sur demande, Otros sobre consulta

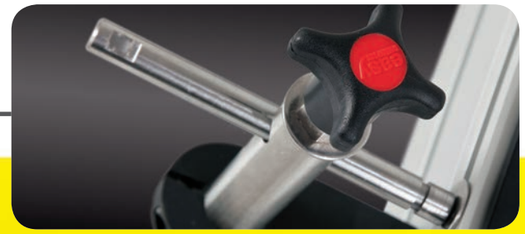

Others on request, Andere auf Anfrage,
Autres sur demande, Otros sobre consulta

Quality and Service

When you are looking for a quality conveyor component, look at Easy Conveyors. We put our Leadership on the line for you. Our complete range of products combines stainless steel, carbon steel, aluminum and engineered plastics to achieve reliability, superior performance and a compact of design. We hope you will now take a moment to look through this comprehensive manual. Then, when you are ready to discuss your needs with the nearest Easy Conveyors representative, please consult the back cover of this catalog for further details about our sales network. We are able and eager to assist you setting up a smooth running line. The components you want, when and how you want them. Easy Conveyors is ready and able to satisfy your needs with quick answers and delivery of standard or custom made products. Our customers around the world know that the shortest distance between a problem and its solution is to call us: innovations, research, engineering and production are always under a strict control to improve our service and products.

Technical manual for the ETS conveyor systems

This technical manual has been developed to assist you with specific engineering information when a new conveyor is designed as well as when an existing conveyor is going to be modified. Terms like TPM (Total Productive Maintenance) and SMED (Single Minute Exchange of Dies) are getting more and more important. With the right choice of chains and components you can design your conveyors to meet these principles. A large part of our program suits these principles. With this manual we intend to create some “CONVEYOR AWARENESS”. As you will notice, most attention will be given to the construction details for the modular belt or chain, because this is the ‘moving part’ in a conveyor and therefore more critical when it comes to construction details. We also emphasize on guides as together with the belts, these are in direct contact with the customer’s product and therefore of utmost importance. The right choice of type, style of the side guides can make the difference between a medium and a high production efficiency of a filling line.

For additional data and information about technical details of our products please refer to:

- Conveyor Belts catalogue
- Conveyor Roller catalogue
- Conveyor Chain catalogue
- Conveyor Support catalogue
- Conveyor Side guiding catalogue

Contact us To contact your local Technical Support check our website www.easy-conveyors.com or send an email to: support@easy-conveyors.com We cannot take responsibility for imperfections, damage or injuries due to wrong conveyor design, poor installation or improper use of our products made with or without reference to the information in this manual. We appreciate your suggestions to improve this Engineering Manual.

Selecting the size

A product’s center of gravity, its inherent stability and its contours determine whether it is suited for transport on a mat top, table top, belt or roller conveyor system. The size of the conveyor system is selected according to the conveyed products, dimensions and weight. The maximum product width depends on its shape and the position of its center of gravity.

ETS designs

The EMBS & ETS version in aluminum is an economic solution for many transport tasks. Open profiles prevent large amounts of contaminants from accumulating in the system and are especially easy to clean. The stainless steel version is used in areas that require wet cleaning or the use of acidic or alkaline cleaning agents to comply with stringent hygiene rules, as for primary packaging in the food industry.

Notes for system layout

- Using a capture drive is related to short lightly loaded conveyor systems. This type of construction means the belt is tightened and tensioned by adjustment at one or both shafts. This conveyor system can be used in a reversing operation. It is important to be aware of temperature fluctuations when using this type of construction. In the event of low temperatures, the belt will contract significantly. At high temperatures the belt will expand, which could result in poor or even complete lack of engagement from the sprockets on the drive wheels.
- Using “sag” modules relates to longer and more heavily loaded conveyor systems. The first “sag” module must be placed after the drive unit. This ensures continuous positive engagement from the sprockets on the drive wheel. Another advantage is that it is possible to accommodate any belt contraction/expansion.
- Using a center drive is similar to the conveyor system with the “sag” modules. The only exception is that it can be used in a reversing operation. However, it cannot handle the same heavy loads!
- There is a limit on the maximum weight of the transported product and the maximum length of the conveyors due to the permissible belt tensile force.
- Belt width from > 340 must have an additional support profile for section loads >10kg/m
- The maximum width of a transported product depends on the position of its center of mass and the lateral guides.
- When using a conveyor with cleats for vertical transport, the maximum weight of a single product is limited by the strength of the cleats.
- Accumulation operation is not possible with static friction belt or cleated belt.
- Pay attention that the slide rails and section profiles are clean when assembling the system. Metal shavings or dust are highly abrasive and cause an extreme amount of wear!
- Avoid accumulation before and in the curves.
- Accumulation must never occur at the drive wheels.
- Depending on the system’s construction and the product being conveyed, certain places pose a risk of pinching / crushing. Appropriate safety devices must be provided in the operating area, as required. Also observe the notes in the assembly instructions which can be found in the download section at http://www.easy-conveyors.com
- Avoid conveying materials with a temperature higher than 60°C
- The maximum pulling force of the ETS chain is 3000 N / m. In practice this means that the curve is the critical part when it comes to force. It also means that after the curve a pretty long straight section can be built without having to much force on out belt. A curve can better be close to the return unit then near to the drive unit. If there is an option, you can take this to consideration.

Conveyor length

Conveyor length depends on

- Chain/belt type
- Lubrication
- Product
- Load
- Etc.

Operating temperatures

Dry : -40°C to + 80°C

wet : 0°C to + 65°C

Type	Max. advisable length [m]
Plastic chains, side flexing	22 - 30mtr

These are indicative figures. In any case it is recommended to double check the conveyor length by calculating the resulting chain pull.

A phenomenon called slip stick effect occurs unpredictably. It depends on speed, load, construction and lubrication. Pulsating dynamic forces are the result and affect the service life of all components of a conveyor. More importantly it influences product handling in a negative way. Long conveyors should be avoided in such cases.

Long conveyors result in high chain load, which affects many components of the conveyor and their wear life.

Conveyor speed

Maximum speed in m/min

Type	Max. advisable length [m]		
	Dry	Water	Water & Soap
Plastic chains, side flexing	45	80	115

Under abrasive or high load conditions the maximum speed is reduced. Higher speed causes higher wear in any case. For higher wear resistant materials contact our technical support.

Curve systems

A chain has to be kept in a curve to avoid the chain to jump up from the curve.

Especially with instable products and a multiple strand situation The Tab has a disadvantage: the link is lifting somewhat in the curve creating a 'step' between the individual strands:

Load on curves

When designing a layout, the curves tend to be the limiting factor. The curve adds significantly to the chain pull. The chain pull at the end of the curve is the curve factor times the chain pull at the beginning of the curve. The curve factor 'f ' is depending on the angle of the curve and the friction between chain and curve (for further calculations we refer to our calculation program):

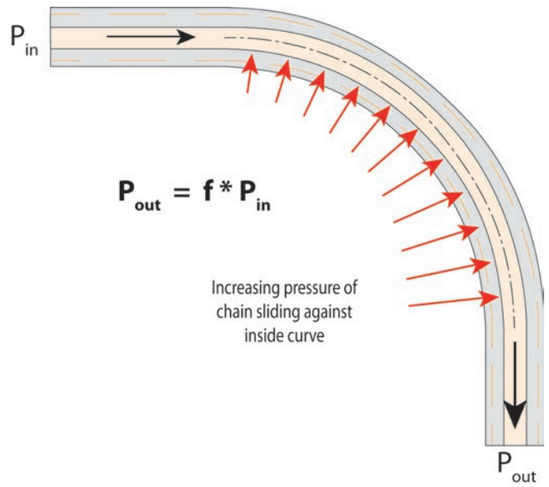

Because of this curve factor it's generally better to position a curve close to the idler end rather than close to the drive end. Then the curve adds relatively less chain pull.

In general we recommend to keep the total curve angle in a conveyor below 180°.

The pressure on the inside of the curve increases through the curve and together with the speed of the chain it generates heat. The maximum allowable Pressure and Velocity (speed) together is called PV limit. This is an important factor next to the max allowable chain pull. The generated heat will warm up the curve material and when it gets too warm, it will become softer and wears out fast.

To maximize the PV limit, Easy Conveyors uses a special material:

TCS:

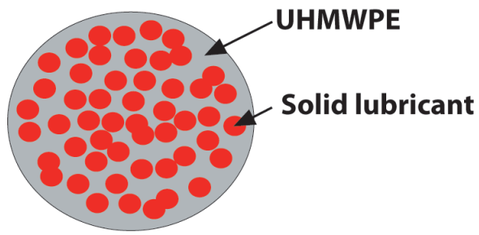

- TCS is a unique compound of UHMWPE and a solid lubricant.
- TCS drastically reduces the coefficient of friction whilst maintaining the characteristics of UHMWPE.
- TCS also has a better thermal conductivity compared to UHMWPE.

WEAR STRIPS

Construction:

There are different ways of supporting a chain or belt with wear strips:

- Parallel support => this way is as default for our systems;
- Heavy duty support => in case of heavy load and/or high impact;

Make sure the wear strip is chamfered at the entry side and that there's enough space between the lengths of wear strip to absorb thermal expansion:

Thermal expansion TCP: 10-15 mm/m +10 °C (K)

Thermal expansion TCS: 0.10-0.15 mm/m / °C

Heavy duty support: In case of heavy loads or high impact, it's advisable to support the belt. Bear in mind that a heavy duty support can also easily collect dust and dirt. Make sure abrasives can leave the system.

Selection of wear strip material:

Wear strip material	Plastic chains & belts	
	Dry	**Lubricated**
TCS	recommended	possible
TCP	possible	possible

Temperature limits of wear strip materials must be considered.

TCS

- UHMWPE with built in dry lubricant
- Offers even lower coefficient of friction and less noise emission than standard UHMWPE
- Basic material properties are similar to UHMWPE

TCP

- To be used in slightly abrasive conditions
- Absorption of humidity to be considered

APPLICATIONS

Gripper chains

- Chain tracks must be adjusted parallel. The tolerance for the parallel adjustment of the tracks is < 2mm. Incorrect adjustment can lead to overloading and a high wear of gripper-flights as well as of the basic roller chain.

- Gripper ribs must be oriented backwards relative to the running direction of the chain, as shown in the picture.

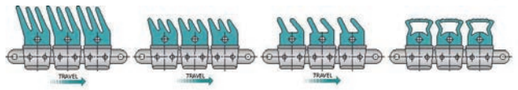

- The control system of the conveyor must assure that no backline pressure is created in order to avoid damage at gripper chains.

- The clearance between the chain tracks must be adjustable. Gripping forces must be adjusted according to the product. General rule: as tight as necessary, as loose as possible. The product must be removable by hand.

- A tensioning system is necessary. Tension should just take away the play out of the chain.

- Touching products must be avoided – particularly in curving sections. The gap between the products must be big enough.

- Lubrication helps to extend the service life of the chains as well as of the chain guides.

- EXTRA style curves with the stainless steel strip will significantly elongate the service life of the curves.

- Both chain strands must run at the same speed. Any speed differential causes damage at the chain and possibly also at the product. One central drive is recommended.

Selection of gripper version:

T1: soft containers, e.g. empty PET bottles, empty cans, non pressurized containers.

T2: solid containers, e.g. glass bottles, pressurized containers.

T3: containers with non-cylindrical shape.

T4: small containers.

APPLICATIONS

Static electricity

Anti Static (AS) chain and belt material has the following properties: Surface resistivity: 10^5 Ω/sq (According to IEC60093 test method) Volume resistivity: 10^3 Ωm

In order to avoid sparks:

- It must be assured on site that the electric charge is dissipated to the ground.
- Wear strips must be conductive and grounded.
- Sprockets and idler wheels must be conductive and grounded.

For further information regarding use of our AS chains in hazardous areas please contact our Technical Support.

Noise reduction

- Use plastic chains/belts instead of steel chains.
- When designing a layout use multiple strand or wider belt running at a lower speed rather than single stand or narrow belt running at higher speed.
- Avoid chain/belt colliding with conveyor parts.
- Reduce speed differentials and thus product impact.
- Adjust sprockets/idlers according to our recommendation in the catalogue
- Use materials with optimized sliding properties (e.g. TCS wear strips, product guides and curves).
- Apply lubrication.

Inclined and declined conveyors

Maximum angles to avoid product sliding down on the chain

Chain type	Lubricated	Dry
Plastic chains/belt	2.5°	4.5°
Rubber top chains plastic	12 / 15°	15 / 20°

Pollution on the chain as well as on the product surface influences the maximum angles negatively.

Declines:

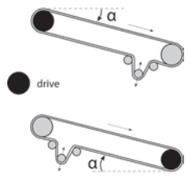

tan(α) > friction coefficient between chain and wearstrips Soft start/stop is recommended.

tan(α) < friction coefficient between chain and wearstrips Soft start/stop is recommended.

Dynamic tensioner is in both cases recommended.

Inclines:

Drive is normally located at the upper end. Soft start/stop is recommended.

Curve construction in combination with inclines/declines:

ETS Side flexing chain can be used in inclined/declined conveyors only under the following restrictions:

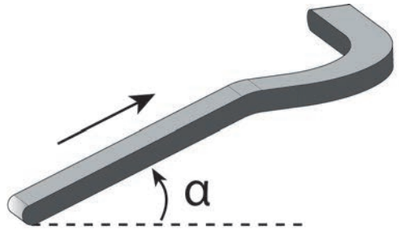

Incline is possible before curve

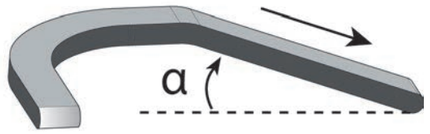

Incline is possible after curve

Otherwise the chain could be lifted out.

Accumulation

Accumulation of products results in increased load on the chain as well as in increased wear on chain/belt and product.

Cleaning:

The cleaning regime needs to be re-evaluated when going away from wet lubrication because:

- Wet lubricant has also cleaning effect
- More dedicated cleaning is required f.e. where product loss occurred

Product quality:

The type and quality of the material has an influence on the behavior on the conveyors like:

- Quality of PET
- Quality of Cans
- Quality of Glass

- Raw material	- Steel/ aluminum	- Raw material; origin
- Colorants	- Painted or varnished	- New or returnable
- Blockers	- Design	- Design
- Other additives	- Material thickness	- Surface finish of bottle
- Design/ settings of machine		

Process:
When designing a layout please bear in mind that the line is going to run without wet lubrication. Think about:

- Wider conveyors -> slower speed
- Longer inliners/outliners
- Shorter buffer sections [?] Back Line Pressure
- Optimized line controls
- Larger radius curves

Mechanical:
Some small mechanical issues on conveyors that seem not to create problems need to be addressed when going away from wet lubrication. Make sure that the chains/belts are running completely free (without obstruction). Some points of attention:

- TCS wear strips and curves with built-in lubricant can replace the wet lubrication to a certain extent.
- Perfect alignment of different sections.
- Smooth transfers of wear strips.
- Stable and straight side guides at right position.
- Positioning of sprockets and idlers.
- Smooth transfer straight into curve.

Factor H:
The most important factor is the Human Factor: the people that are dealing with the line.

- How do the local people deal with the line?
- Who's responsible?
- How are the contracts made?
- 'Mind set' change when reducing lubrication!
- Never mix products! -> f.e. teflon spray in combination with dry lubricant creates high friction

So, is Dry Lubricant a good idea?

- Yes, in a good number of cases it brings interesting advantages.
- But be aware of the down side to get the full benefit!

Completely dry may be better?

- In certain areas of the bottling line and certain products: yes
- Depalletiser + outfeed conveyors
- Labeling, coding and packaging areas
- Cans and PET and even glass
- Beware of abrasives & chemicals

Product handling Forces due to acceleration:
The force necessary to accelerate the chain and products is calculated by:

$$F = M * a$$

F = force in [N]
M = mass of chain and product in [kg]
a = acceleration in [m/s²]

This extra force is working not only on the chain but also on the bearings, the drive unit and the structure. Frequent start-stops create an extra fatigue load on the chain and thus shorten the life time of the chain. In the calculation there's a factor included depending on number of start-stops per hour. Soft starts or frequency controllers are always advisable. Not only for the life time of the chain but also for smoother product handling and avoiding problems at start-up with products particularly unstable.

Maximum acceleration:
The max acceleration force on a product to be able to 'take along' the product with the chain is depending on the friction between product and chain. Maximum acceleration a_{max} can be calculated with:

$$a_{max} = \frac{F_{max}}{M} = \frac{W * \mu}{M} = \frac{M * g * \mu}{M} = g * \mu$$

W = weight of product in [N]
M = weight of product in [kg]
μ = coefficient of friction between chain and product
g = gravitational acceleration = 9.81 m/s²

Maximum force on products to avoid tip page:
The maximum acceleration without products falling over is depending on the shape (position of centre of gravity), the weight and the material of the product. This is for instance also important when the product is being conveyed onto a dead plate. See below sketch:

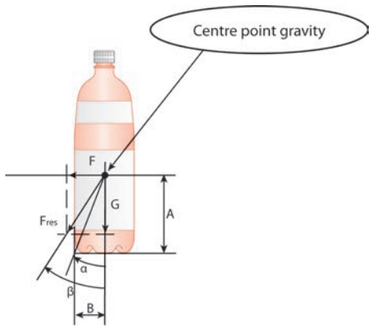

G = weight product
F = horizontal force on product
F_{res} = horizontal force on product

The force F is the force due to acceleration or deceleration of the product (F=M*a), or due to a different cause like other bottles or a side guide. The bottle will tip over when the angle ß is larger than angle α. Angle α is determined by the diameter of the foot print of the product (B= ½ * diameter) and the height of the centre point of gravity (=A). Angle ß is determined by the horizontal force on the bottle (= F) relative to the weight of the bottle (= G).
The max force F is found by following formula:

$$\frac{F_{max}}{G} = \frac{B}{A} \rightarrow F_{max} = G * \frac{B}{A}$$

or

$$\mu < \frac{B}{A} \longrightarrow \text{OK}$$

$$\mu > \frac{B}{A} \longrightarrow \text{not OK}$$

MSV= maximum speed variation

$$MSV = \sqrt{2 * g\left(\sqrt{H^2 + B^2} - H\right)}$$

Centrifugal forces:

When a product is being conveyed through a curve there's a centrifugal force working on the product. This force on the product is compensated by the friction between chain and product and by a side guide.

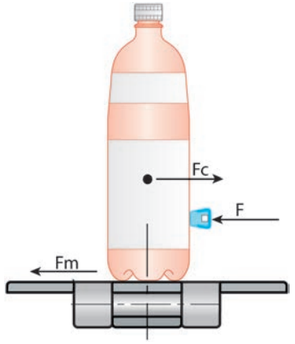

The centrifugal force is calculated with:

$$F_c = \frac{M * v^2}{r}$$

M= weight of the product
v = speed
r = centre radius of the curve

Friction force between chain and product is calculated with:

$$F_m = M * g * \mu$$

g = gravitational acceleration
μ = coefficient of friction between chain and product.

The minimum force F that needs to be generated by the side guide is:

$$F = F_c - F_m = M * \left[\frac{v^2}{r} - g * \mu\right]$$

Pressure of accumulating products:

When a product is standing still (e.g. against a stopper or guide), the chain running underneath the product creates a force on the product equal to the weight of the product multiplied by the coefficient of friction between chain and product. Each following product is pushing with the same force against the next product, so the resulting force is proportional to the total weight of products upstream.

$$F_a = W_a * L_a * \mu$$

Fa = accumulation force
Wa = weight of the accumulating products in Kg/m.
La = length of accumulation in m
μ = coefficient of friction between chain and product.

Side transfer action:

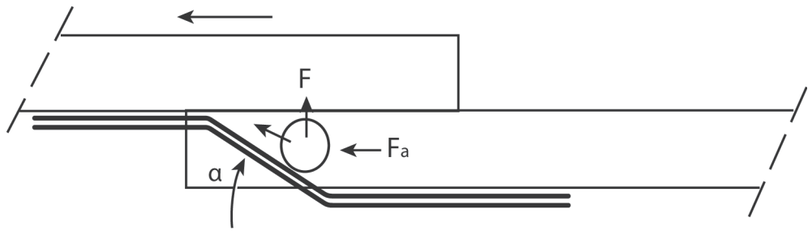

Pushing the product sideward creates a force F on the product against the side guide

$$F = F_a * \sin(\alpha) = W_a * L_a * \mu * \sin(\alpha)$$

(see explanation of symbols above)

Nowadays cans and bottles are becoming thinner and thinner. At the same time more and more installations are running with less or no lubrication and are so increasing the coefficient of friction.

That's why it's important to take also these forces on the products into consideration. In the above mentioned formula the angle α plays an important role in a smooth transfer and reduced forces on the products. This angle should be kept a small as possible.

Shaft size:

The shaft must fulfill the following conditions:

- max shaft deflection under full load (Fw). fmax is 2.5 mm. If the calculated shaft deflection exceeds this max value, select a bigger shaft size.
- Torque at max load must be below critical value

Shaft deflection can be calculated with following formula:

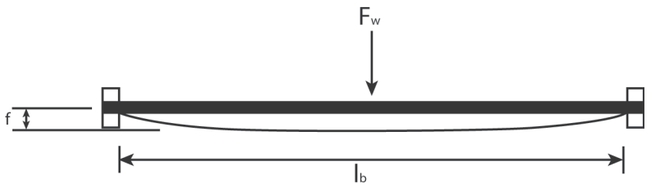

$$f = 0.013 * F_w * \frac{l_b^3}{E * I} \quad [mm]$$

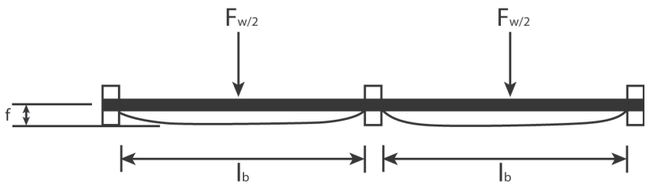

$$f = \frac{1}{370} * F_w * \frac{l_b^3}{E * I} \quad [mm]$$

For uni-directional head drive Fw = Ts

For bi-directional centre drive Fw = 2 * Ts

For uni-directional pusher drives Fw = 2.2 * Ts

Shaft size [mm]	Inertia [mm4]
Ø20	7850
Ø25	19170

Shaft material	Modulus of elasticity E [N/mm2]	Shearing strenght [N/mm2]
Stainless steel (low strength)	195000	60

The torque on the shaft is calculated with:

$$T_{max} = F_W * \frac{d_p}{2} * 10^{-3} \quad [Nm]$$

$$T_{adm} = \eta_{adm} * \frac{d_w^3}{5000} \quad [Nm]$$

T_{max} = maximum torque

T_{adm} = admissible torque

η_{adm} = admissible shearing strength [N/mm²]

for max. admissible shearing strength see table below:

	Maximum allowable torque
Shaft diam. [mm]	Stainless steel [Nm]
Ø20	141
Ø25	276

Bearings:

Relubrication is depending on the operating conditions. Dust, load, humidity, temperature, vibrations: all affect the relubrication interval. Below table show indicative values for relubrication intervals. Please note that all our bearing are pre-greased in the factory. These is no need for immediate re-greasing. Furthermore, regreasing should be done in small amounts and with care.

Use conditions	Temperature	Re-lubrification period
Clean	up to 50°C	1-2 years
Clean	50 ÷ 70 °C	4 -8 months
Clean	70 ÷ 100 °C	1 - 3 months
Dirty	up to 70°C	2 - 8 week
Dirty	70 ÷ 100 °C	2 - 4 week
Humid + wet	-	1 - 2 week

Standard PIN Material
Special reinforced acetal resin.

Benefits:

- Suitable for metal detectors
- Easy disposal of chains after use

Plastic belt materials
Low Friction Acetal Resin
This material is commonly used in the market and offers an improved co-efficient of friction. It is also suitable for use in high speed applications.
Color: White
This material is FDA (Food and Drug Administration) approved for direct contact with food.

Rubber materials
TPR
TPR is used for ETS chains and EMBS belts and for some gripper chains. TPR is a SEBS type rubber, which assures an optimum bonding on the plastic base material.

Storage of plastic chains and belts
- Materials of our plastic chains and belts offer best stability and resistance against environmental effects at appropriate storage:
  - in the original packaging,
  - without environmental radiation / UV light,
  - dry- in a non aggressive environment - a temperature between 5°C and 35°C

- First IN, First OUT.
  We have applied that procedure in our logistic department.
  We recommend this procedure to any external warehouse.

- Do not stack pallets or other heavy goods on top of chain packs. Chains inside the packs might get damaged.
- Do not stack chain packs higher than the original stacking height – as dispatched from our shipping department.

Coefficients offriction
Below listed coefficients can be used as a guideline. Dependent on environmental and application requirements (temperatures, lubricant, material combinations, dirt/debris, product and chain/belt surfaces, etc.) the coefficients are subject to variation.

Coefficient of friction between chain and wearstrip:

Friction coefficient Chain/Slide rail (μ_T)

	Dry/normal	Rough	Dirty	Water	Water & Soap	Oil
Straight sections **TCP**	0,2	0,4	0,5	0,16	0,10	0,10
Straight sections **TCS**	0,18	0,35	0,45	0,14	0,10	0,10
Head drive unit	0,3	0,40	0,50	0,24	0,15	0,15
Return unit	0,3	0,40	0,50	0,24	0,15	0,15
Center drive unit	1,0	1,35	1,70	0,8	0,5	0,5
Connection drive unit	0,6	0,80	1,0	0,48	0,3	0,3

Coefficient of friction between chain and product (μ_{ST}):

Lubrication	Product material					
	Paper carton	**Metal (steel)**	**Aluminum**	**Plastics incl, PET**	**Glass (return)**	**New glass, ceramics**
Dry	0,28	0,25	0,25	0,21	0,24	0,20
Water		0,20	0,18	0,16	0,18	0,15
Water & Soap		0,15	0,14	0,13	0,14	0,12

ETS SYSTEM

easy ...SYSTEMS

Chemical resistance

Data shown in the table was taken from laboratory tests performed on unstrained samples and are merely indicative, Chemical resistance under normal working conditions can depend on various factors, such as stress and temperature, concentration of the chemical agent and duration of its effects, Valid for ambient temperature (21°C)

Chemical agent	METALS								PLASTICS										RUBBERS							
	EXTRA		AISI 304		AISI 316		OT.NI		POM		PBT		PP		PA		PE		EPDM		NBR		SEBS		VITON	
	C %		C %		C %		C %		C %		C %		C %		C %		C %		C %		C %		C %		C %	
Acetic Acid	5	☆	20	☆	100	☆		O	5	●	10	☆	40	☆	10	●	10	☆	25	☆		●	25	O	20	●
Acetone		☆	25	☆		☆		☆		O		O		☆	100	☆		☆		☆		●		O		●
Acrylonitrile						☆								☆	100	☆				☆		●		O		●
Aluminium chloride				O	10	O								O	10	☆				☆		☆		☆	SA	☆
Aluminium sulphate					SA	☆								☆	10	☆		☆		☆		☆		☆	SA	☆
Amyl alcohol				☆		☆						☆		☆	10	☆		☆		☆				☆		☆
Ammonia		☆	100	☆		☆		●		☆		O	30	☆	10	☆		☆		☆		O		O		O
Ammonium chloride				O		☆							10	☆	10	☆				☆		☆		☆	SA	☆
Aniline		☆		☆		☆								☆	100	O	3	☆		●		●		●		☆
Barium chloride				O	SA	☆								☆	10	☆				☆		☆		☆		☆
Beer		☆		☆		☆		☆		☆				☆		☆		☆		☆		☆		☆		☆
Benzene		☆	70	O		☆				☆		●		☆				O		●				●		
Benzoic acid			100	☆	SA	☆						☆	SA	☆	SA	O				●		☆		●		☆
Benzol				☆		☆		☆		☆		☆		O	100	☆		O		●		●		●		O
Boric acid		O	SA	☆		☆					10	☆	SA	☆	10	☆	SA	☆		☆		☆		☆	SA	☆
Brine	10	●		O		☆						☆		O		O		☆		☆				O		
Butter				☆		☆		☆		☆		☆		☆		☆		☆		☆		☆		O		☆
Butyl acetate						☆						O		O	100	☆				O				O		●
Butyl alcohol				☆										☆	100	☆				☆		O		☆		☆
Butyl glycole						☆								☆	100	☆				☆				☆		
Calcium chloride		●		O		☆		☆				☆	50	☆	10	☆	SA	☆		☆		☆		☆	SA	☆
Carbon sulphide				☆		☆					☆			☆	100	☆				●		●		●		☆
Carbon tetrachloride			10	☆				☆		☆				●		☆						●				☆
Chlorine water		●		●		O				●		●		●				●	3	O			3	O		
Chloroform		O	10	☆		☆		☆		●		●		O	100	●		●		●		●		●		☆
Chromic acid			25	☆	50	O						O			1	O			50	O		●	50	●	50	☆
Citric acid	10	☆		☆	SA	☆		●		O	10	☆	10	☆	10	O		☆		☆		☆		☆	SA	☆
Cyclohexane						☆						☆		☆	100	☆				●		☆		●		☆
Cycloexanol						☆						☆		☆	100	☆				●		☆		O		☆
Decalin						☆						O		O		☆				●		O		●		●
Dioxane						☆						☆		O		☆				O		●		●		
Distilled water		☆	10	☆		☆		☆		☆		☆		☆		☆		☆		☆				☆		●
Ethyl acetate				O		☆						O		☆	100	☆						●				O
Ethyl alcohol				☆						☆			96	☆	96	☆						O				☆
Ethyl chloride				☆				O						●	100	☆		O				O				●
Ethyl ether						☆						☆		☆	100	☆										☆
Ferric chloride				O		☆					10	☆		☆	10	☆				☆		☆		☆	SA	☆
Food fats		☆	100	☆		☆				☆		☆				☆		☆		O		☆		O		☆
Food oils		☆		☆		☆				☆				☆		☆		☆				☆				☆
Formaldehyde		☆		☆		☆		☆		☆		☆	40	☆	30	☆		O		O		O		O	40	●
Formic acid	2	O		●	100	☆		☆	10	●		O			10	●	10	●		☆		●		☆		O
Freon 12				☆								☆				☆						☆				☆
Fresh water		☆		☆		☆				☆		☆		☆		☆		☆		☆		☆		☆		☆
Fruit juice		☆		O		☆				☆		☆		☆		☆		☆		☆		☆		☆		☆
Gasoline		☆		☆		☆		O				O		O		☆		O		●		O		●		☆
Glycerine		☆		☆		☆		☆		☆		☆		☆		☆		☆		☆		☆		☆		☆
Hydrocloric acid		●		●		●		O	35	●	20	O	30	☆		●	35	☆	15	☆		O	15	☆	37	☆
Hydrofluoric acid				●		●							40	☆		●	70	☆				●			48	☆
Hydrogen peroxide	3	☆		☆	100	☆										●			30	O		●	30	●	90	☆
Isopropyl alcohol						☆						☆		☆		☆				☆				☆		☆
Lactic acid		O				☆		●		☆	10	☆	20	☆		☆		☆		O		☆		O		☆
Linseed oil				☆		☆				☆		☆		☆		☆		☆		O		☆		●		

Chemical agent	METALS								PLASTICS										RUBBERS							
	EXTRA		AISI 304		AISI 316		OT.NI		POM		PBT		PP		PA		PE		EPDM		NBR		SEBS		VITON	
	C %		C %		C %		C %		C %		C %		C %		C %		C %		C %		C %		C %		C %	
Magnesium chloride				O		☆						☆		☆		☆				☆		☆		☆	SA	☆
Methyl acetate				O		☆						O		☆		☆				O		●		●		●
Methyl alcohol			80	☆		☆		☆		☆		☆				☆				☆		O		☆		O
Methylene chloride		O		O		☆				●		●		O		☆		O		●		●		●		O
Milk		☆		☆		☆		☆		☆		☆		☆		☆		☆		O		☆		☆		☆
Mineral oil				☆		☆				☆		☆		☆		☆		☆		●		☆		●		☆
Nitric acid	25	O	65	☆						☆				☆		●		O			10	●			70	☆
Nitrobenzene						☆						☆		☆		O				●		●		O		O
Oleic acid		O		☆		☆		☆				☆		☆		☆		O		●		O		●		O
Oxalic acid			65	☆		☆					10	☆		☆		O				O		O		O		☆
Paraffin						☆				☆		☆						☆		O				●		
Petroleum				☆		☆		☆		☆		☆		☆		☆		●		●		☆		●		☆
Petroleum ether				☆		☆		☆		☆		O		☆		☆				●		●		●		☆
Phenol				☆		☆						●		☆		●				O		●		O		☆
Phosphoric acid	25	O		●		☆		●		●		●		☆		●		☆		☆	20	O		☆	85	☆
Potassium bichromate					SA	☆						O		☆		O				☆		O		O	SA	☆
Potassium bromite						☆						☆		☆		☆				☆		☆		☆		☆
Potassium hydroxide		☆	50	☆		☆				●		●		☆		☆		☆		☆		O		☆		☆
Potassium permanganate				☆		☆						☆		☆		●			10	☆		●	10	O		☆
Sea water		●		☆		☆		☆		O		☆		☆		☆		☆		☆		☆		O		☆
Silicone oil						☆						☆		☆		☆				☆		☆		☆		☆
Silver nitrate				O		☆								☆		☆						O				☆
Sodium carbonate		☆	100	☆	SA	☆				☆	10	☆		☆		☆		☆		☆		☆		☆		☆
Sodium chloride		O		O		☆		☆		☆				☆		☆		☆		☆		☆		☆	SA	☆
Sodium hydroxide	40	☆		☆	60	☆					10	●				☆				☆		O		☆		
Sodium hypochlorite				●	SA	O				●	10	O		☆		☆		☆	10	☆		●	10	O	5	☆
Sodium silicate			100	☆		☆										☆				☆		☆		☆		☆
Sodium sulphate			100	☆		☆										☆				O		☆		☆		☆
Soft drinks				☆		☆				☆		☆		☆		☆		☆		☆		☆		☆		☆
Suds				☆		☆				☆	10	☆		☆		☆		☆		☆		☆		☆		☆
Sulphuric acid		●		●		O		☆		●	2	☆		☆		●		O	50	☆		●	50	O	95	☆
Tartaric acid		☆	50	☆		☆		●		O	50	☆		☆		☆		☆		O		☆		☆		☆
Tetrahydrofuran						☆						☆		O		☆				●		●		●		●
Tetralin				●		☆						☆		●		☆				●		●		●		☆
Tincture of iodine				O		☆		●						☆		●		☆		O		●		O		☆
Toluol		☆				☆						☆		☆		☆				●		●		●		O
Transformer oil		☆				☆						☆		O		☆				●		☆		●		☆
Tricholoethylene				●	100	☆						●		O		O				●		●		●		☆
Triethanolamin						☆						☆		☆		☆				O		●		O		●
Turpentine		☆		☆		☆				●		☆						●		●				●		
Vaseline						☆						☆				☆		O		●		☆		●		☆
Vegetable juice		☆		☆		☆				☆		☆		☆		☆		☆		☆		☆		☆		☆
Vegetable oils		☆		☆		☆				☆		●		☆		☆		☆		O		☆		O		☆
Vinegar		☆		☆	100	☆		☆		☆	10	☆		☆		☆		☆	25	☆		O	25	O		●
Water and soap		☆		☆		☆				☆		☆		☆		☆		☆		☆		☆		☆		☆
Whisky		☆		☆		☆		☆		☆		☆		☆						☆		☆		☆		☆
Wine		☆		☆		☆		☆		☆		☆		☆		☆		O		☆		☆		☆		☆
Xilol		☆		☆		☆		O		●		☆		●		☆		☆		●		●		●		☆

ABBREVIATION

C = concentration
SA = saturated
☆ = good resistance
● = insufficient resistance (not recommended)
O = fairly good resistance depending on use conditions
blank spaces = no tests performed

Parameters affecting wear rate

Operating conditions:
- Load
- Speed
- Number of starts per hour- No soft start/frequency inverter controlled drive
- Product accumulation
- Lubrication
- Water quality
  - Concentration of chlorines
  - Water hardness
  - Contaminations
  - Discontinuous water supply
- Lubricant
  - Suitability/performance
  - Dosing
  - Efficiency of nozzles

Cleaning:
- Cleaning agent
  - Frequency
  - Intensity
  - Rinsing
  - Concentration
  - Temperature
- Chemical attack

Environment:
- Temperature
- Humidity
- Wear increasing media/abrasives
- Corrosion
- Cleanliness- Soil e,g, from construction work

Conveyor components:
- Material quality
- Construction
- Dimensional accuracy of
  - Wear strips
  - Sprockets
  - Idlers
  - Return rollers
  - Shaft alignment

Conveyor construction:
- Choice of chain/belt
- Suitability of selected chain/belt for the application
- Mounting of wear strips
  - Flatness
  - Chamfers
  - Raised portions
  - Expansion compensation gaps

Changed/modified conditions:
- Modification of conveyor or its parts/components
  - Maintenance
  - Overhaul

Cleaninginstructions
Cleaning is necessary to:
- minimize dirt and debris built up
- keep bacteriological situation under control
- elongate service life of chains/belts
- ensure smooth running of chain/belt for optimum product stability
- prevent crashes due to f,e, glass debris
- prevent malfunction due to sticky residues
- keep friction low

Frequency:
As a rule of thumb we say that cleaning the line once every week is sufficient,

Of course in practice depending on the circumstances this can be more frequent (f,e, during product changes in case of product loss or other pollution) or less frequent in a relatively clean environment,

In the direct surrounding of the filler cleaning will be more frequent anyway, Depending also on the bacteriological situation it may be necessary to clean at least once a day or once every shift,

Also chemicals coming f,e, from a pasteurizer may ask for more frequent cleaning to prevent the chemicals from affecting the chain/belt materials,

In a can line where aluminum cans are filled, there's the aluminum oxide that has to be kept under control, This can occur also far away from filler-pasteurizer, where the line is running dry, When the cans are accelerating on an inliner the remaining drops will fall down with the aluminum oxide on the chain causing a highly abrasive sludge to built up on the inliner, Therefore it may be necessary to clean more frequent also further down the line due to 'local' circumstances,

Method:
Important for an optimum service life of the chains and belts is a general inspection on the conveyors already during operation, Listen for strange –rattling or squeaking- noises, Check transfer plates, return rollers, bearings, etc, Make sure the chain/belt is still running free without extra load or obstruction, Often the service life of a chain/belt is reduced for mechanical reasons that can be sorted easily,

When cleaning we advice to go thru following steps:
1. Check for foreign parts on the conveyor, Check also the return part,
2. Rinse with warm (max 60°) or cold water thoroughly while chain/belt is running,
3. Use mild (PH-5-9) detergent according to suppliers instructions,
4. If necessary clean mechanically (brush) when pollution is hard to remove,
5. Rinse thoroughly with warm (max 60°) or cold water, Make sure all detergent is rinsed off while chain/belt is running,
6. Final mechanical check that chain/belt is running free and without obstruction, During this process it's important not to forget to clean in between carry and return section and underneath where the return support system is,

Especially with plastic chains/belts the detergent in use needs to be checked for compatibility with the plastic materials of the chain/belt,

General:
As obvious as it seems, cleaning is important! Since nowadays pressure on production rates and production costs are getting higher and higher, companies tend to look at cleaning when trying to cut costs,

Less time and resources are available while at the same time the capacity of the lines (and thus pollution and product loss) has to go up,

When companies are setting up a cleaning regime they tend to focus on the individual machines (mainly filler and surrounding) and not so much on the conveyors, Therefore we want to promote 'CONVEYOR AWARENESS' in this respect,

Dry versus wet:
When a wet lubricant is in use (water & soap) product loss is normally flushed off by the water & soap, Often the soap also has a 'cleaning function' built in, But wet circumstances also attract dust and dirt and wet circumstances will increase the growth of bacteria, When a line is standing still during a stop or during the weekend without cleaning, the lubricant will dry in which may cause pollution and changing sliding characteristics of the chains/belt after several times,

Under dry circumstances the conveyors generally remain cleaner, But product loss needs to be cleaned to avoid functional problems of the line,

Therefore functionally speaking wet lubrication is more safe but requires just as well regular cleaning and is a high cost factor,

All together with the present state of conveyor technology it is possible to run a major part of a glass, can or a PET line dry taken into consideration that a regular cleaning regime is in place,

Inspection procedure
1. Inspect chains for unusual wear patterns or damage,
2. Look for excessive gaps between chain flights,
3. Check conveying surface for Flatness, bent or broken Flights,
4. Inspect hold-down tabs or beveled sliding surfaces for excessive wear,
5. Review chain catenary sag for proper amount,
6. If take-ups are used, check that take-up tension is not excessive, Do not preload chain,

7. Check all idlers, rollers, turn discs and sprockets for freedom of rotation,
8. Examine sprockets for excessive wear,
9. Look for debris build up in sprocket tooth pockets,
10. Check for excessive guide ring wear,
11. Check all wear strips and fasteners for excessive wear,
12. Check all transfer points, dead plates, turn tables, turn discs and sprockets for proper elevation and alignment,
13. Review function of lubrication system,
14. Inspect general cleanliness of conveyor system,

Installationprocedure

1. Check all sprockets, idlers, turn discs and rollers for proper elevation and alignment with regard to the conveyor tracks,
2. Check all wear strips (carrying and return), dead plates, dividers and transfers mechanism for proper location, elevation, spacing and Flatness,
3. Check all fasteners for proper tightness (torque), Fasteners used on wear strips and dead plates must have recessed heads,
4. Check all conveyor splice points for proper elevation, alignment and fastening,
5. Inspect conveyor system for obstructions by pulling a short section of chain (1 meter) through the entire conveyor,
6. Check lubrication system (if present),
7. Install conveyor chain, assuring that the following has been done:
   - A Check for correct direction of chain travel,
   - B Assemble chain in 3 meters sections and avoid twisting or damaging the chain,
   - C Connect chain sections on the conveyor, Make sure that the connecting pins are not protruding,
   - D Adjust chain catenary (sag) to the proper elevation, Note: readjustment is usually necessary after a certain operating time,
8. Insure that lubricant is evenly dispersed through conveyor system,
9. Start up conveyor by jogging and/or using short running periods before loading the system, Be alert to unusual noises or actions, If a problem should occur, refer to the trouble shooting guide,

Replacement criteria

Chains must be replaced when:

- The chain starts to jump on the sprocket due to elongation, This may start to happen at 3% elongation or more,
- The thickness of the plate has been reduced by 50%,
- The surface becomes uneven or scratched causing stability problems,
- The hinge is worn to an extend that the pins protrude

Belts must be replaced when:

- The belt starts to jump on the sprocket due to elongation, This may start to happen at 3% elongation or more,
- The thickness of the module has been reduced by 1 mm from the top and from the bottom,
- The surface becomes uneven or scratched causing stability problems,

When replacing chains/belts, it is recommended to replace wear strips and sprockets/idlers as well, Sprockets and Idlers must be replaced when:

- teeth are worn flat
- chain/ belt does not release well
- teeth are damaged
- bore of idler is worn out and idler starts to oscillate
- hub or keyway are damaged
- new chain/ belt is installed

Wear strip must be replaced when:

- thickness is reduced by 50% and stability problems occur
- dirt or debris is embedded
- Fixing rivets protrude.

Layout procedure for a ETS conveyor system

Task definition:

Determine number and position of the work steps, calculate the available space.

▼

Plan rough system layout:

Lengths, segments, curves, slopes (sketch) ◀

▼

Product-specific data:

Determine conveyed material data:
Dimensions, mass, friction figures, antistatic environment needed?

▼

Production-specific data:

Determine conveyor parameters:Speed, conveyed material spacing and cycle, number of start-up operations/h, accumulation section

▼

Detailed system layout planning:

Accumulation sections, product interchange points

▶ **www.easy-conveyor.com**

▼

Chain tensile force calculation F

▶ **Examples 1-2, page 254 – page 258**

▼

$F<F_{permissible}$ (page 257 & 260):

YES ▼ **NO** ▶

$F<<F_{permissible}$ (oversized) ▶

NO ▼ **YES** ▶ ▼

Check drive torque:

$$\frac{M * 2}{ØTK} \geq F$$

OK? **YES** ▼ **NO** ▶

[✔]

Needed data

- The length and/or width of the belt conveyor (mm)
- The width of the belt (mm)
- Wanted speed (mtr/min)
- Product weight (Kg)
- Product length (mm) **[!]** (in direction of transport)
- Amount of products on the conveyor (pcs)
- Product to transport (bakery, food, plastic, cardboard, glass or metal)
- Slide profile (TCP / TCS)
- State of contact surfaces between slide rail/chain -(dry normal -dirty -rough/Water/Water & Soap/Oil)
- State of contact surfaces between goods/chain (dry/water/water & soap)
- Ambient temperature (°C)
- Start/Stop each hour (pcs/hr)
- Frequency controller (Yes or No)
- Accumulation (Yes or No)
- Amount of products to accumulate (pcs)
- Running hours per day
- Type of loading

Weight (q_K)		Actual lenght (L_K)	Straight lenght (L_S)	
(kg/m²)	Drive / return units	(mtr)	Drive / return units	(mtr)
1,05	ETS80 FLAT TOP Return unit	0,777	Return unit	0,34
3,2	ETS80 ROLLER			
1,15	ETS80 FRICTION Drive unit	0,984	Drive unit	0,347
1,62	ETS200 FLAT TOP Straight section	2 x L_i		
1,75	ETS200 FRICTION			

Belt length Hor. Curves (mm)	
(two side)	
ETS HORIZONTAL CURVE; 30° R200	609,33
ETS HORIZONTAL CURVE; 45° R200	714
ETS HORIZONTAL CURVE; 60° R200	818,66
ETS HORIZONTAL CURVE; 90° R200	1028
ETS HORIZONTAL CURVE; 180° R200	1656
ETS HORIZONTAL CURVE; 30° R500	923,33
ETS HORIZONTAL CURVE; 45° R500	1185
ETS HORIZONTAL CURVE; 60° R500	1446,66
ETS HORIZONTAL CURVE; 90° R500	1970
ETS HORIZONTAL CURVE; 180° R500	3540

Belt length Vert. Curves (mm) Degrees (ß)	
(two side)	
ETS VERT. SLIDE CURVE; 5° R=500	487,22
ETS VERT. SLIDE CURVE; 10° R=500	574,14
ETS VERT. SLIDE CURVE; 15° R=500	661,67
ETS VERT. SLIDE CURVE; 30° R=500	923,34
ETS VERT. SLIDE CURVE; 45° R=500	11
ETS VERT. SLIDE CURVE; 60° R=500	1446,67
ETS VERT. SLIDE CURVE; 90° R=500	1970

Friction forces occur in curves (μ_R)	
0° (Straight sections)	1,0

Curve angle (vertical)	
5°	1,03
10°	1,05
15°	1,05
30°	1,10
45°	1,20

WHEEL Curve angle (horizontal)	
30°	1,05
45°	1,05
60°	1,075
90°	1,10
180°	1,15

SLIDE Curve angle (horizontal)	
30°	1,2
45°	1,3
60°	1,4
90°	1,6
180°	2,2

Application factor C_1

Approach procedures /h	Application factor
0 – 1	1,0
2 – 10	0,83
11 – 30	0,71
> 30	0,62

Breaking force (max -40°C / +80°C) C_2

Temperature °C	Breaking force factor
0	1,12
20	1,0
40	0,96
60	0,92

Factor C_3 Breakaway torque

Temperature °C	Breaking force factor
0,09 kW	2,1
0,12 kW	2.4
0,18 kW	1,8
0,25 kW	1,8
0,37 kW	1,8
0,55 kW	2,1
0,75 kW	2,2
1,1 kW	2,0
Frequency controller	1,5

The permissible chain tensile force depends on the conveying speed as well as the ambient and operating conditions.

If the calculated chain tensile force exceeds the permissible amount, you can:

- divide the section into various chain conveyors.
- alter the system layout, e.g. by shorten the section.
- shorten the accumulation sections.
- reduce the speed.

1

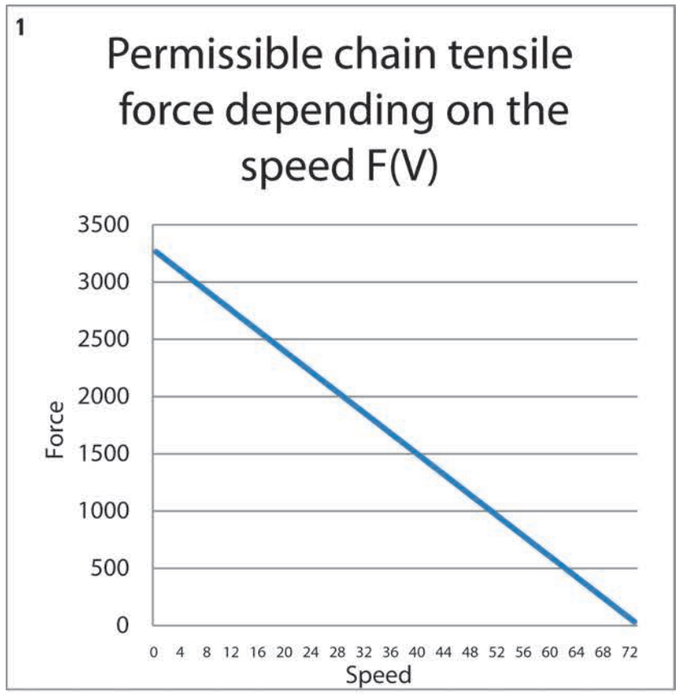

2

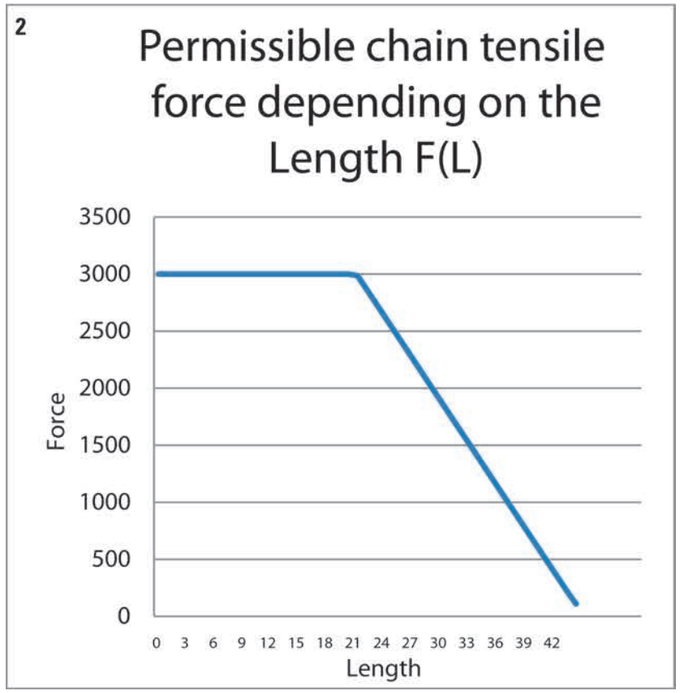

MOTOR SELECTION

The drive torque of the selected gear motor must be greater than the calculated required drive torque.
There are the following options to reduce the required drive torque:

- reduce the chain tensile force (F).
- reduce the speed (v) and use a gear motor with a higher drive torque.
- change the operating conditions (e. g. the ambient temperature)

Procedure for both calculations:

- Divide the conveyor section into segments. Segment 1 starts at the traction stand (e.g. at the return unit, at the connecting drive outlet), the last segment ends at the drive unit. The division is made according to operating mode (conveying operation / accumulation operation). When using horizontal or vertical curves the segment ends after the curve.
- Calculate the individual segments in ascending order. The chain tensile force of the current segment will enter the calculation of the following segment as a counter force. The result of the last segment is the required chain tensile force to operate the conveyor.
- The tensile force resulting from the chain return can generally be overlooked.

Exceptions:

- The conveyor contains more than 2 curves.
- The section load of the goods is lower than that of the chain (round trip): **$q_F \leq 2 \cdot q_K$**

In these cases, the first segment begins at the head drive outlet.

For all calculations

$$q_{Fi} = \frac{M_i * g}{L_i}$$

ETS Straight

$$F_i = [\, F_{i-0} + L_i * (\, q_K + q_{Fi}\,) * \mu_T + (\, L_K - L_i\,) * qK * \mu_T \,] * \mu_R$$

$$F_i = [\, F_{i-0} + L_i * (\, q_K + q_{Fi}\,) * \mu_T \,] * \mu_R \text{ (connection drive))}$$

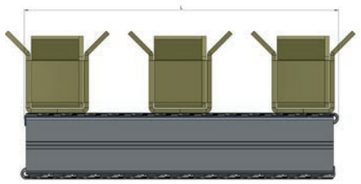

ETS Incline/Decline

$$F_i = [\, F_{i-0} + L_i * (\, q_K + q_{Fi}\,) * (\, \mu_T * \cos ß + \sin ß\,) + (\, L_K - L_i\,) * qk * (\, \mu_T * \cos ß - \sin ß\,) \,] * \mu_R$$

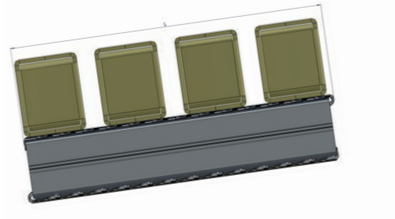

ETS Accumulation (is not possible when using a friction or a cleated belt)

$$F_i = [\, F_{i-0} + L_i * \{\, (\, q_K + q_{Fi}\,) * \mu_T + q_{Fi} * \mu_{ST} \,\} + (\, L_K - L_i\,) * q_K * \mu_T \,] * \mu_R$$

$$F_i = [\, F_{i-0} + L_i * \{\, (\, q_K + q_{Fi}\,) * \mu_T + q_{Fi} * \mu_{ST} \,\} \,] * \mu_R \text{ (connection drive)}$$

LIST OF APPLIED ABBREVIATIONS

F	= Chain Tensile force (at the drive pulley) (N)	M_H	= Run-up Torque (Nm)
$F_{perm.}$	= Permissible load capacity	M_i	Total product mass (Kg)
F_i	= Chain tensile force of individual segments (N)	M_N	= Nominal Torque (Nm)
g	= 9,81 (m/s²)	M_T	= Motor Torque (Nm)
μ_R	= Friction forces occur in curves	ν	= Belt speed (mtr/min)
μ_{ST}	= Friction coefficient Product/Chain	A_Z	= Amount of Accumulation
μ_T	= Friction coefficient Chain/Slide rail	f_B	= Service Factor
L	= Conveyor section length (mtr)	P_A	= Mechanical Drive Power (kW)
L_i	= Segment length (mtr)	P_M	= Motor Power (kW)
L_K	Actual chain length (mtr)	R_H	= Running hours / day
L_S	= Chain length straight (mtr)	S_L	= Shock Load
q_{Fi}	Section load of conveyed material on segment Li (N/mtr)	S_S	= Start/Stops /hr
		U_L	= Uniform Load
q_K	Weight of the belt (N/mtr)	V_L	= Variable Load
ß	= Angle for Incline or Decline (°)	η	= Efficiency (%)

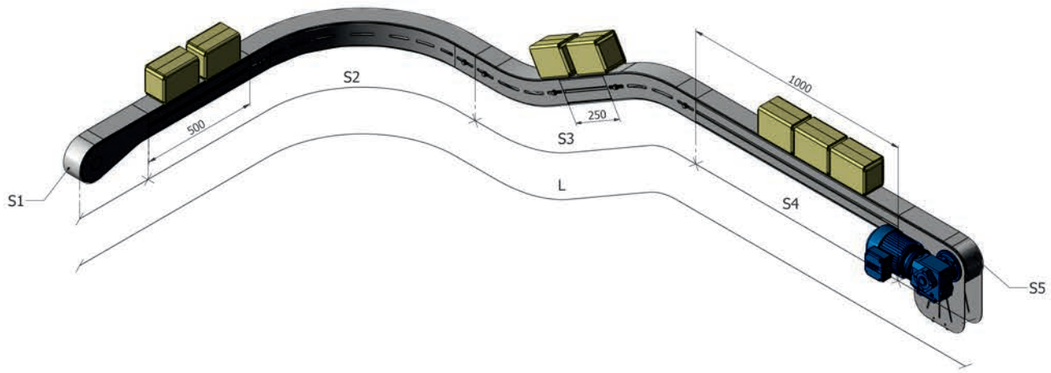

Example 1: Calculation ETS Incline	
Conveyor system	ETS Aluminum
Chain width	80mm
Wanted speed	20 mtr/min
Pitch diameter	Ø147.3mm
Product weight	10 kg
Product Length	175mm
Product material	Cardboard
Conveyor length L	6,232mtr
Chain section load q_K	11,28 N/m (1,15*9.81)
Slide rail	TCP
State of contact surfaces μ_{ST}	Dry
State of contact surfaces μ_T	Dry - Normal
Ambient temperature	30°C
Start/Stop	5/h
Frequency controller	Yes
Accumulation on Section 3	Yes
Amount of products to accumulate	3 pieces
Running hours per day	16 hr
Type of loading : Uniform Load Permissible load capacity	2366N (see table 1 or 2 page 251)

ETS SECTION 1

L_i = Segment length (mtr)	: 0,34
L_K = Actual chain length (mtr)	: 0,777
μ_R = Friction forces occur in curves	: 1,0
μ_T = Friction coefficient Chain/Slide rail	: 0,3

$q_{Fi} = \frac{M_i * g}{L_i}$ $\quad q_{Fi} = \frac{0 * 9,81}{0,34}$ $\quad q_{Fi} = 0$

ETS Section 1

$F_1 = [F_{i-0} + \{ L_i * (q_K + q_{Fi}) * \mu_T \} + \{ (L_K - L_i) * q_K * \mu_T \}] * \mu_R$

$F_1 = [0,0 + \{ 0,34 * (11,28 + 0) * 0,3 \} + \{ (0,777 - 0,34) * 11,28 * 0,3 \}] * 1,0$

$F_1 = [0,0 + \{ 0,34 * 3,384 \} + 1,479] * 1,0$

$F_1 = [0,0 + 1,151 + 1,479] * 1,0$

$F_1 \approx$ **2,63 N**

ETS SECTION 2

L_i = Segment length (mtr)	: 0,986 ((Slide Curve 90° I 1 side) + 1 * 0.5mtr)
L_K = Actual chain length (mtr)	: 1,972 ((Slide Curve 90° I 2 side) + 2 * 0.5mtr)
μ_R = Friction forces occur in curves	: 1,60 (Slide curve 90°)
μ_T = Friction coefficient Chain/Slide rail	: 0,3
M_i = Total product mass (Kg)	: 20 Kg

$q_{Fi} = \frac{M_i * g}{L_i}$ $\quad q_{Fi} = \frac{20 * 9,81}{0,986}$ $\quad q_{Fi} = 199$ N/m

ETS Section 2

$F_2 = [F_{i-0} + \{ L_i * (q_K + q_{Fi}) * \mu_T \} + \{ (L_K - L_i) * q_K * \mu_T \}] * \mu_R$

$F_2 = [2,63 + \{ 0,986 * (11,28 + 199) * 0,2 \} + \{ (1,97 - 0,986) * 11,28 * 0,2 \}] * 1,60$

$F_2 = [2,63 + \{ 0,986 * 42,056 \} + 2,22] * 1,60$

$F_2 = [2,63 + 52,04 + 2,22] * 1,60$

$F_2 \approx$ **74,12 N**

ETS SECTION 3

L_i = Segment length (mtr)	: 1,17 ((Vert. Curve 30° I 1 side) + 1 * 0.25mtr)
L_K = Actual chain length (mtr)	: 2,35 ((Vert. Curve 30° I 2 side) + 2 * 0.25mtr)
μ_R = Friction forces occur in curves	: 1,10 (Vert. slide curve 30°)
μ_T = Friction coefficient Chain/Slide rail	: 0,2
M_i = Total product mass (Kg)	: 20 Kg

$q_{Fi} = \frac{M_i * g}{L_i}$ $\quad q_{Fi} = \frac{20 * 9,81}{1,17}$ $\quad q_{Fi} = 167,70$ N/m

ETS Section 3

$F_3 = [F_{i-2} + \{ L_i * (Q_K + Q_{Fi}) * (\mu_T * \cos ß + \sin ß) \} + \{ (L_K - L_i) * Q_K * (\mu_T * \cos ß - \sin ß) \}] * \mu_R$

$F_3 = [74,12 + \{ 1,17 * (11,28 + 167,70) * (0,2 * 0,866 + 0,5) \} + \{ (2,35 - 1,17) * 11,28 * (0,2 * 0,866 - 0,5) \}] * 1,10$

$F_3 = [74,12 + \{ 1,17 * 178,98 * 0,67 + \{ 13,20 * -0,33 \}] * 1,10$

$F_3 = [74,12 + 140,30 - 4,36] * 1,10$

$F_3 \approx$ **231,07 N**

ETS SECTION 4

L_i = Segment length (mtr)	: 1,0 (Straight section)
L_K = Actual chain length (mtr)	: 2,0 (Straight section * 2)
μ_R = Friction forces occur in curves	: 1,0
μ_T = Friction coefficient Chain/Slide rail	: 0,2
M_i = Total product mass (Kg)	: 60 Kg

$q_{Fi} = \frac{M_i * g}{L_i}$ $\quad q_{Fi} = \frac{60 * 9,81}{1}$ $\quad q_{Fi} = 588,6$ N/m

Accumulation

$q_{Fi} = \frac{M_i * g}{L_i}$ $\quad q_{Fi} = \frac{60 * 9,81}{0,525}$ $\quad q_{Fi} = 1121,14$ N/m

ETS Section 4

$F_4 = [F_{i-3} + \{ L_i * (Q_K + Q_{Fi}) * \mu_T + Q_{Fi} * \mu_{ST} \} + \{ (L_K - L_i) * Q_K * \mu_T \}] * \mu_R$

$F_4 = [231,07 + \{ 1,0 * (11,28 + 588,6) * 0,2 + 1121,14 * 0,28 \} + \{ (2,0 - 1,0) * 11,28 * 0,2 \}] * 1,0$

$F_4 = [231,07 + \{ 1,0 * 120 + 313,92 \} + 2,26] * 1,0$

$F_4 = [231,07 + 433,92 + 2,26] * 1,0$

$F_4 \approx$ **667,25 N**

ETS SECTION 5

L_i = Segment length (mtr) Li	: 0,34
L_K = Actual chain length (mtr)	: 0,777
μ_R = Friction forces occur in curves	: 1,0
μ_T = Friction coefficient Chain/Slide rail	: 0,3

$q_{Fi} = \frac{M_i * g}{L_i}$ $\quad q_{Fi} = \frac{0 * 9,81}{0,34}$ $\quad q_{Fi} = 0$

ETS Section 5

$F_5 = [F_{i-4} + \{ L_i * (Q_K + Q_{Fi}) * \mu_T * \} + \{ (L_K - L_i) * Q_K * \mu_T \}] * \mu_R$

$F_5 = [667,25 + \{ 0,347 * (11,28 + 0) * 0,3 \} + \{ (0,984 - 0,347) * 11,28 * 0,3 \}] * 1,0$

$F_5 = [667,25 + \{ 0,347 * 3,384 \} + 2,16] * 1,0$

$F_5 = [667,25 + 1,17 + 2,16] * 1,0$

$F_5 \approx$ **670,60 N**

$F_{max} = F_{perm.} * C_1 * C_2$

$F_{max} = 2366 * 0,83 * 1,0$

$F_{max} \approx$ **1964 N** $\quad$ F = 670,60 N

System is OK

$M_N = \frac{F * (d_A / 2)}{1000}$

$M_N = \frac{670,60 * (147,3 / 2)}{1000}$

$M_N \approx$ **49,39 Nm**

Run-up Torque

$M_H = M_N * C_3$

$M_H = 49,39 * 1,5$

$M_H \approx$ **74,10 Nm**

$P_A = \frac{F_U * \nu}{1000}$ $\quad P_A = \frac{670,60 * 0,33}{1000}$

$P_A = 0.22$ kW

$P_M = \frac{P_A}{\eta}$ [kW] chose, the next larger standard motor

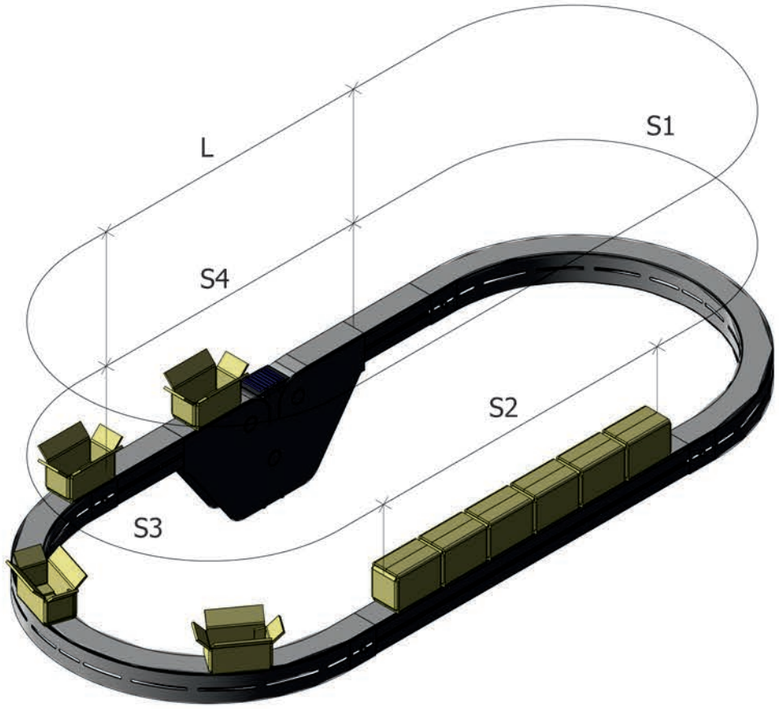

Example 2: Calculation ETS Connection drive	
Conveyor system	ETS Aluminum
Belt width	140mm
Wanted speed	15 mtr/min (0,25 mtr/sec)
Pitch diameter	Ø147.3mm
Product weight	5 kg
Product Length	175mm
Product material	Cardboard
Conveyor length L	6,6mtr
Chain section load q_K	12,95 N/m (1.32*9.81)
Slide rail	TCS
State of contact surfaces μ_{ST}	Dry
State of contact surfaces μ_T	Dry - Normal
Ambient temperature	45°C
Start/Stop	30/h
Frequency controller	Yes
Accumulation on Section 2	Yes
Amount of products to accumulate	6 pieces
Running hours per day	8 hr
Type of loading : Uniform Load Permissible load capacity	2591N (see table 1 or 2 page 251)

ETS SECTION 1

L_i = Segment length (mtr)	: 1,97 ((slide Curve 180° | 1 side) + 0.2mtr)
μ_R = Friction forces occur in curves	: 2,2 (Slide curve 180°)
μ_T = Friction coefficient Chain/Slide rail	: 0,18

$q_{Fi} = \frac{M_i * g}{L_i}$ $\quad q_{Fi} = \frac{0 * 9,81}{1,97}$ $\quad q_{Fi} = 0$

ETS Section 1

$F_1 = [F_{i-0} + \{ L_i * (q_K + q_{Fi}) * \mu_T \}] * \mu_R$

$F_1 = [0 + \{ 1,97 * (12,95 + 0) * 0,18 \}] * 2,2$

$F_1 = [0 + 4,60] * 2,2$

$F_1 \approx$ **10,10 N**

ETS SECTION 2

L_i = Segment length (mtr)	: 1,1 (Straight section)
μ_R = Friction forces occur in curves	: 1,0
μ_T = Friction coefficient Chain/Slide rail	: 0,18
M_i = Total product mass (Kg)	: 25 Kg

$q_{Fi} = \frac{M_i * g}{L_i}$ $\quad q_{Fi} = \frac{25 * 9,81}{1,1}$ $\quad q_{Fi} = 267,55$ N/m

Accumulation

$q_{Fi} = \frac{M_i * g}{L_i}$ $\quad q_{Fi} = \frac{25 * 9,81}{1,05}$ $\quad q_{Fi} = 280,3$ N/m

ETS Section 2

$F_2 = [F_{i-1} + \{ L_i * (q_K + q_{Fi}) * \mu_T + q_{Fi} * \mu_{ST} \}] * \mu_R$

$F_2 = [10,10 + \{ 1,1 * (12,95 + 267,55) * 0,18 + 280,3 * 0,28 \}] * 1,0$

$F_2 = [10,10 + 55,54 + 78,48] * 1,0$

$F_2 \approx$ **144,12 N**

ETS SECTION 3

L_i = Segment length (mtr)	: 1,77 (Slide Curve 180° I 1 side)
μ_R = Friction forces occur in curves	: 2,2 (Slide curve 180°)
μ_T = Friction coefficient Chain/Slide rail	: 0,18
M_i = Total product mass (Kg)	: 10 Kg

$q_{Fi} = \frac{M_i * g}{L_i}$ $\quad q_{Fi} = \frac{10 * 9{,}81}{1{,}77}$ $\quad q_{Fi} = 83{,}14$ N/m

ETS Section 3

$F_3 = [\, F_{i-2} + \{ L_i * (Q_K + Q_{Fi}) * \mu_T \}] * \mu_R$

$F_3 = [\, 144{,}12 + \{ 1{,}77 * (12{,}95 + 83{,}14) * 0{,}18 \}] * 2{,}2$

$F_3 = [\, 144{,}12 + 30{,}61] * 2{,}2$

$F_3 \approx$ **384,42 N**

ETS SECTION 4

L_i = Segment length (mtr) Li	: 1,545 (Drive unit 1,345mtr + 0.2mtr)
μ_R = Friction forces occur in curves	: 1,0
μ_T = Friction coefficient Chain/Slide rail	: 0,6
M_i = Total product mass (Kg)	: 5 Kg

$q_{Fi} = \frac{M_i * g}{L_i}$ $\quad q_{Fi} = \frac{5 * 9{,}81}{1{,}545}$ $\quad q_{Fi} = 31{,}75$ N/m

ETS Section 4

$F_4 = [\, F_{i-3} + \{ L_i * (Q_K + Q_{Fi}) * \mu_T \}] * \mu_R$

$F_4 = [\, 384{,}42 + \{ 1{,}545 * (12{,}95 + 31{,}75) * 0{,}6 \}] * 1{,}0$

$F_4 = [\, 384{,}42 + 41{,}44] * 1{,}0$

$F_4 \approx$ **425,86 N**

$F_{max} = F_{perm.} * C_1 * C_2$

$F_{max} = 2591 * 0{,}71 * 0{,}96$

$F_{max} \approx$ **1766 N** $\quad$ F = 425,86 N

System is OK

$M_N = \frac{F * (d_A / 2)}{1000}$

$M_N = \frac{425{,}86 * (147{,}3 / 2)}{1000}$

$M_N \approx$ **31,37 Nm**

Run-up Torque

$M_H = M_N * C_3$

$M_H = 31{,}37 * 1{,}5$

$M_H \approx$ **47,05 Nm**

$P_A = \frac{F_U * \nu}{1000}$ $\quad P_A = \frac{425{,}86 * 0{,}25}{1000}$

$P_A = 0.11$ kW

$P_M = \frac{P_A}{\eta}$ [kW] chose, the next larger standard motor

Conclusion

You can see above that the motor and also the conveyor system are selected because of the input. Also you can see that some values cause a certain overload situation for the system, motor or both.

There are a few options to prevent an overload.

- Lower the speed
- Lower the amount of product on the conveyor
- Less Start/Stops
- Less Accumulation
- Change type of loading
- Shorten the conveyor
- Choose another conveyor system
- Less running hours per day.
- Choose another transport system. (roller conveyor, mattop conveyor or tabletop conveyor)

ETS SYSTEM

easy ...SYSTEMS

Chain/belt jumps on sprocket

Possible causes	Remedy
Chain/belt is enlongated e.g. due to wear or overloaded	Replace chain/belt and sprocket. Check other components as well. Eliminate cause of overload.
Improper catenary sag	Check dimensions and adjust
Sprocket is worn	Replace sprocket
Wrong sprocket type	Install correct sprocket
Misaligned sprocket	Check and adjust
Improper sprocket position	Check and adjust position

Chain/belt does not release well

Possible causes	Remedy
Incorrect sprocket dimension or type	Check and replace sprocket
Sticky residue	Clean chain/sprocket or renew
Improper catenary sag	Check dimensions and adjust

Slip stick operation

Possible causes	Remedy
Slip stick	Use lubrication Reduce chain/belt tension by shortening the conveyor
Return roller diameter too small	Install larger rollers
Chain/belt catches the conveyor	Remove obstructions. Check return part as well
Improper catenary sag	Check dimension and adjust

Damaged chain hinges

Possible causes	Remedy
Overloading	Eliminate cause of overloading Check sprockets and other components Replace chain/belt Replace components if necessary
Blocking and obstructions	Check the complete conveyor
Exceeding the minimum backflex radius	Check conveyor construction
Too small radius for side flexing chain	Check minimum radius of chain and adjust accordingly

Elongation

Possible causes	Remedy
Overloading	Eliminate cause of overloading Check sprockets and other components Replace chain/belt Replace components if necessary
Wear from dirt in hinges	Improve cleaning or Use HB pins

Rapid curve wear

Possible causes	Remedy
Overheating	Use EXTRA curve or Nolu-S
Embedded abrasives	Replace curve

Chain drifts sideways on sprockets

Possible causes	Remedy
Bad shaft/sprocket alignment	Adjust or use collars
Conveyors is not level	Adjust

Cracked hinge eyes

Possible causes	Remedy
Stress-corrosion caused by incompatible chemicals	Check chemicals compatibility with chain/belt material Use appropriate chemicals

Chains for magnetic system releases from curve

Possible causes	Remedy
Worn curve	Replace curver
Improper chamfering of the infeed or other obstructions	Check and adjust/rework
No soft start-up	Install frequency inverter drives
Curve not mounted level	Check and adjust

Corroded steel chain

Possible causes	Remedy
Incompatible combination of chain material and chemicals	Use only compatible chemicals
May occur even with stainless steel	Consider higher graded material

Excessive chain/belt wear

Possible causes	Remedy
Pollution	Improve cleaning
Failing lubrication	Check lubrication system Contact lubricant supplier
Obstructions	Check all sections
Debris in return part	Clean conveyor Install roller with larger diameter

Sprockets don't slide on shaft when belt extends due to temperature increase

Possible causes	Remedy
Pollution	Improve cleaning
Axial fixing incorrect	Re-adjust axial fixing according to temperature situation
Wrong bore tolerance	Replace by sprockets with PLUS tolerance

Rapid wear on sprockets

Possible causes	Remedy
Abrasive conditions	Improve cleaning Use steel sprockets

Please contact technical support at any time in case of doubt.